# *ASSEMBLY INSTRUCTIONS*
# *COASTER FINE FURNITURE*

*Fine Furniture for every stage of life*

# 193940NAT
# *Dining Table*

REVISION 0 : 02/02/2026

COASTERFURNITURE.COM

# ITEM : 193940NAT

## ASSEMBLY INSTRUCTIONS

### ASSEMBLY TIPS:

1. Remove hardware from box and sort by size.
2. Please check to see that all hardware and parts are present prior to start of assembly.
3. Please follow attached instructions in the same sequence as numbered to assure fast & easy assembly.

### WARNING!

1. Don't attempt to repair or modify parts that are broken or defective. Please contact the store immediately.
2. This product is for home use only and not intended for commercial establishments.

| ASSEMBLY TIME | 15 MINUTES |
|---|---|

## PARTS IDENTIFICATION

| | | | |
|---|---|---|---|
| A | TOP | 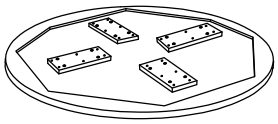 | 1PC |
| B | LEG | 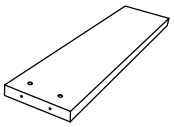 | 4PCS |
| C | MOUNTING BAR | 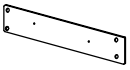 | 4PCS |

## HARDWARE IDENTIFICATION

| | | | |
|---|---|---|---|
| 1 | LONG ALLEN WRENCH (M5 x 95mm - BLK) | | 1PC |
| 2 | SHORT ALLEN WRENCH (M4 x 63mm - BLK) | | 1PC |
| 3 | HEX BOLT (M8 x 60mm - ZB) | 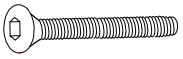 | 8PCS |
| 4 | BOLT (M6 x 30mm - RBW) | 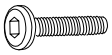 | 16PCS |
| 5 | LOCK WASHER (1/4" - BLK) | | 16PCS |
| 6 | BARREL NUT (M8 x 12 x 18mm - ZB) | | 8PCS |
| 7 | WOOD PLUG (Ø14.5 x 9mm) | | 8PCS |
| 8 | LEVELER (M6 x 14.8mm) | | 4PCS |

ITEM : **193940NAT**

## ASSEMBLY INSTRUCTIONS

## STEP 1

Attention! Allign the correction postion for mounting bar before assembly

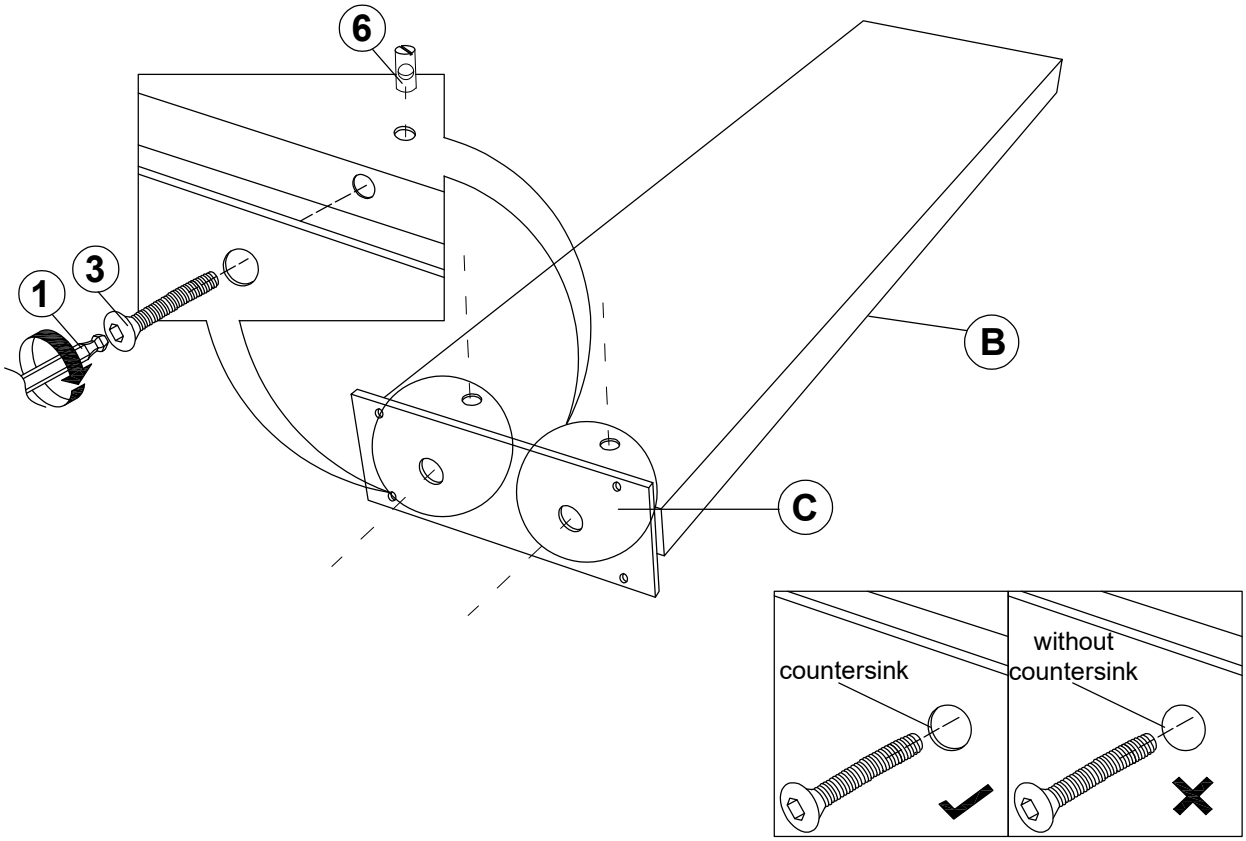


## STEP 2

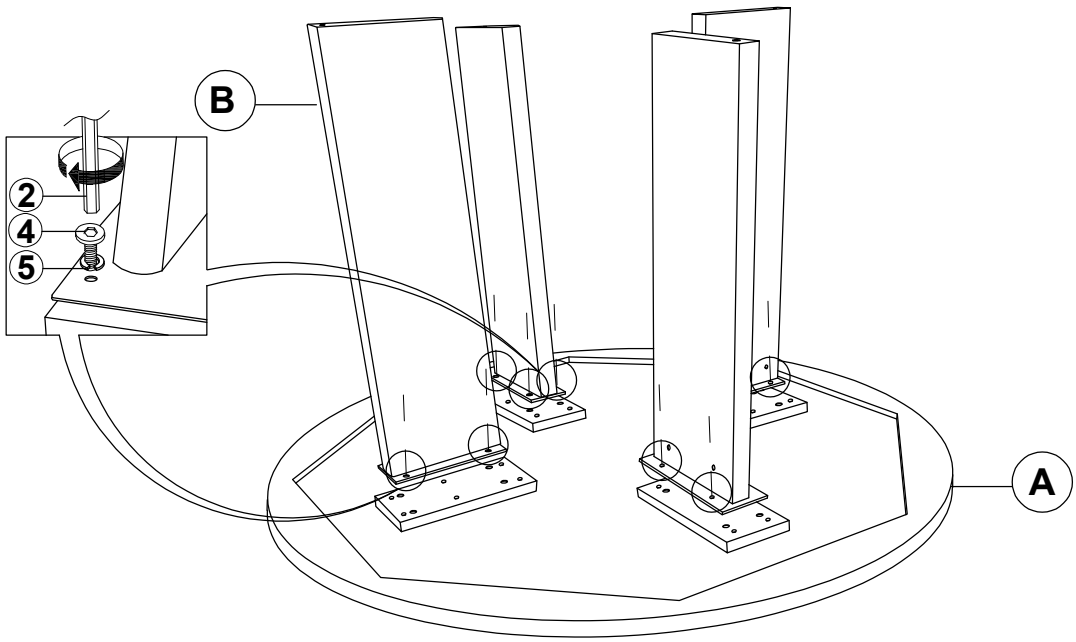

ITEM : **193940NAT**

## ASSEMBLY INSTRUCTIONS

## STEP 3

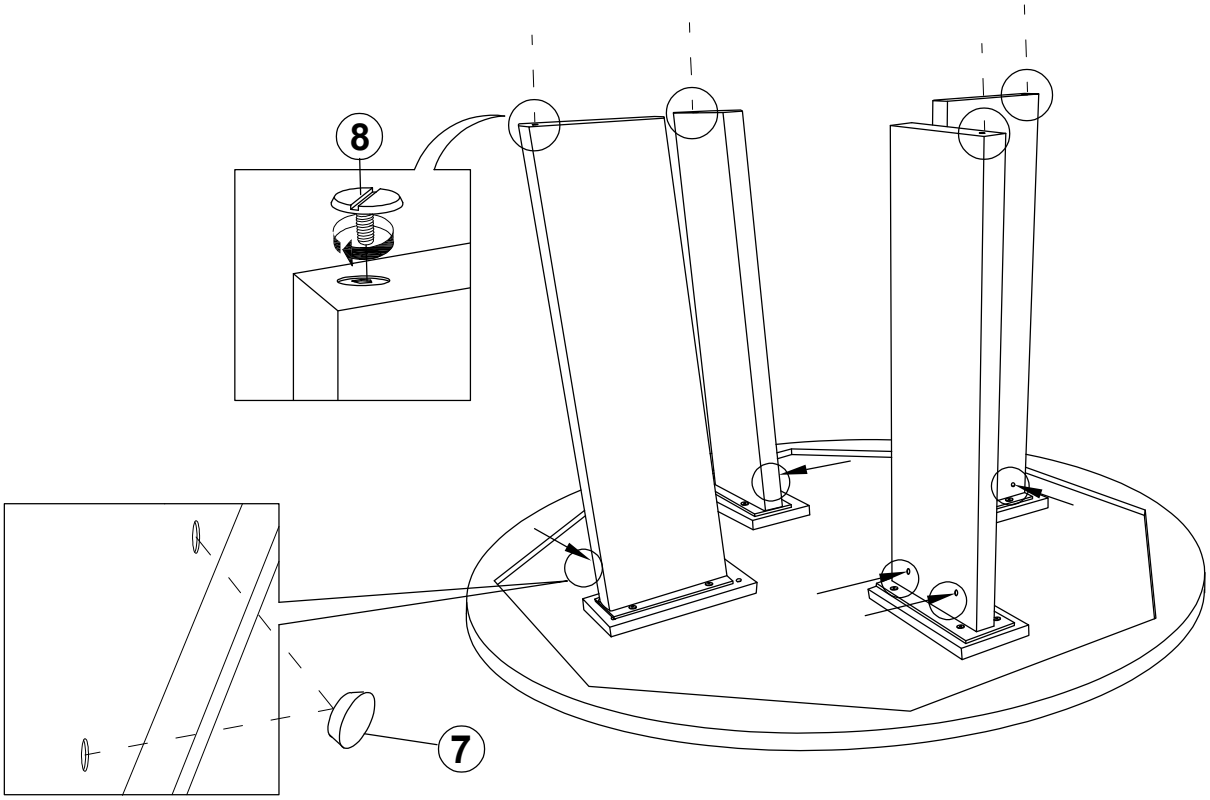


## STEP 4

## COMPLETE

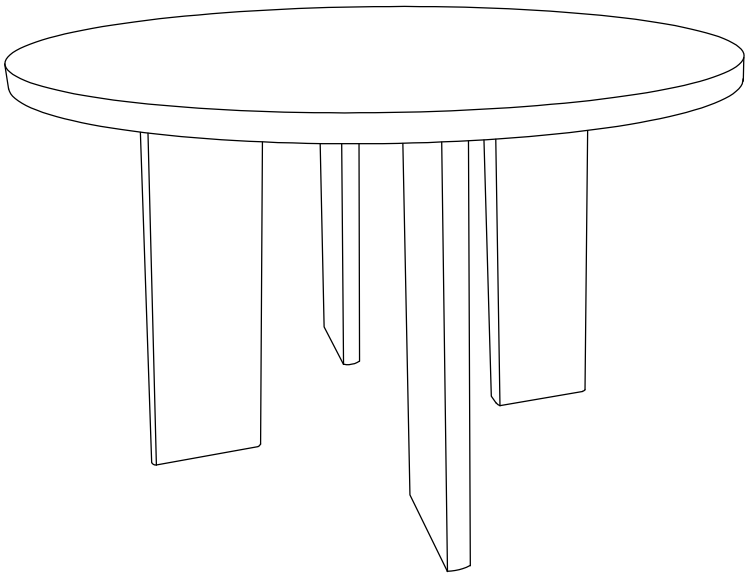

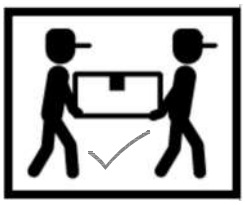

ITEM : **193940NAT**

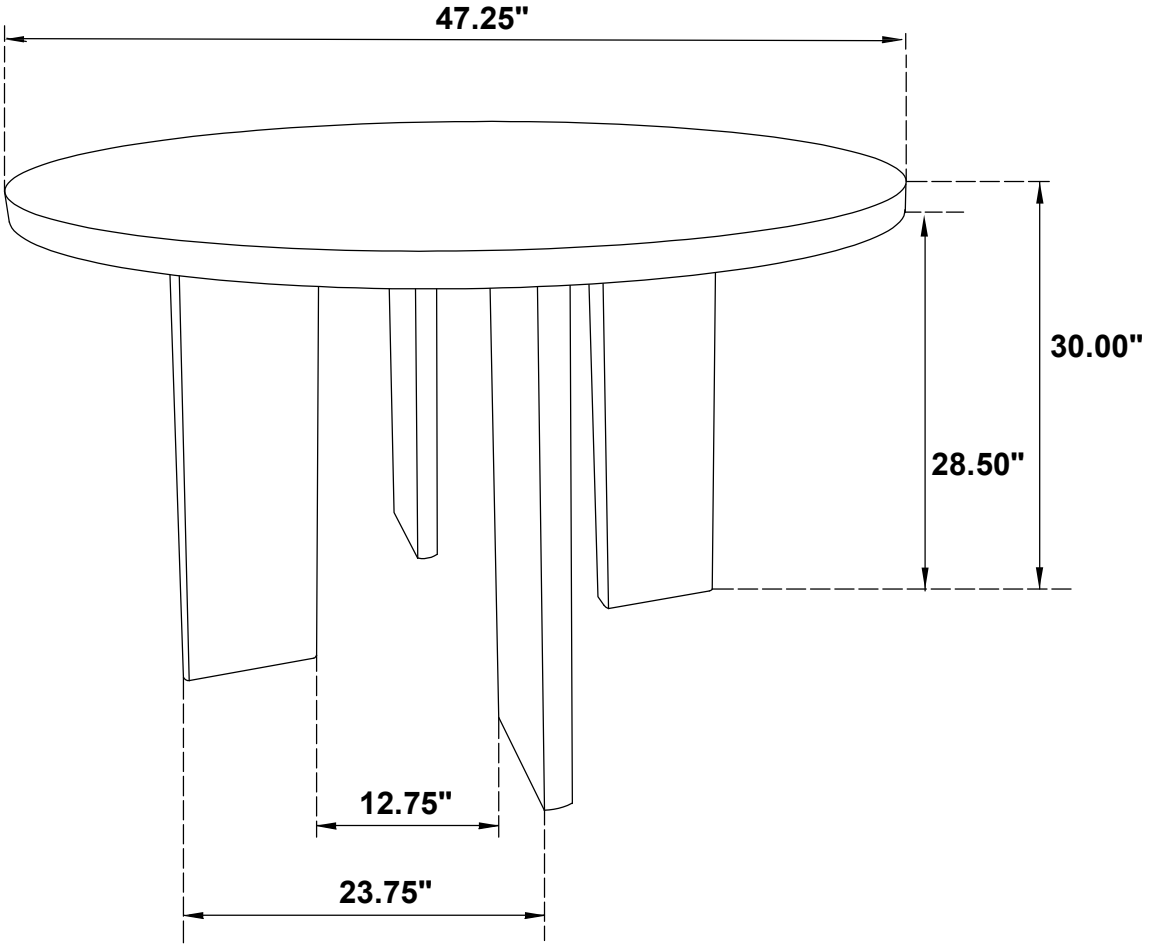


**Note: Dimension tolerance ±5%**

# *ASSEMBLY INSTRUCTIONS*
# *COASTER FINE FURNITURE*

*Fine Furniture for every stage of life*

# 193942NAT
## *Side Chair*

REVISION 0 : 02/02/2026

COASTERFURNITURE.COM

# ITEM : 193942NAT

## ASSEMBLY INSTRUCTIONS

### ASSEMBLY TIPS:

1. Remove hardware from box and sort by size.
2. Please check to see that all hardware and parts are present prior to start of assembly.
3. Please follow attached instructions in the same sequence as numbered to assure fast & easy assembly.

### WARNING!

1. Don't attempt to repair or modify parts that are broken or defective. Please contact the store immediately.
2. This product is for home use only and not intended for commercial establishments.

| ASSEMBLY TIME | 15 MINUTES |
|---|---|

## PARTS IDENTIFICATION

| | | | |
|---|---|---|---|
| A | BACK FRAME | 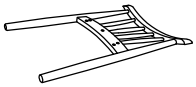 | 1PC |
| B | SEAT CUSHION WITH FRAME | 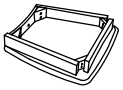 | 1PC |
| C | LEFT FRONT LEG (WITH "C" LABEL) | | 1PC |
| D | RIGHT FRONT LEG (WITH "D" LABEL) | | 1PC |

## HARDWARE IDENTIFICATION

| | | | |
|---|---|---|---|
| 1 | ALLEN WRENCH (M4 x 100mm - BLK) | | 1PC |
| 2 | LONG BOLT (M6 x 80mm - RBW) | | 4PCS |
| 3 | MEDIUM BOLT (M6 x 60mm - RBW) | 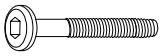 | 4PCS |
| 4 | SHORT BOLT (M6 x 40mm - RBW) | 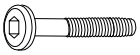 | 1PC |
| 5 | LOCK WASHER (1/4" - BLK) | | 9PCS |
| 6 | FLAT WASHER (1/4" - RBW) | | 9PCS |

**NOTE :**

**Quantities shown are for one chair.**

ITEM : **193942NAT**

## ASSEMBLY INSTRUCTIONS

## STEP 1

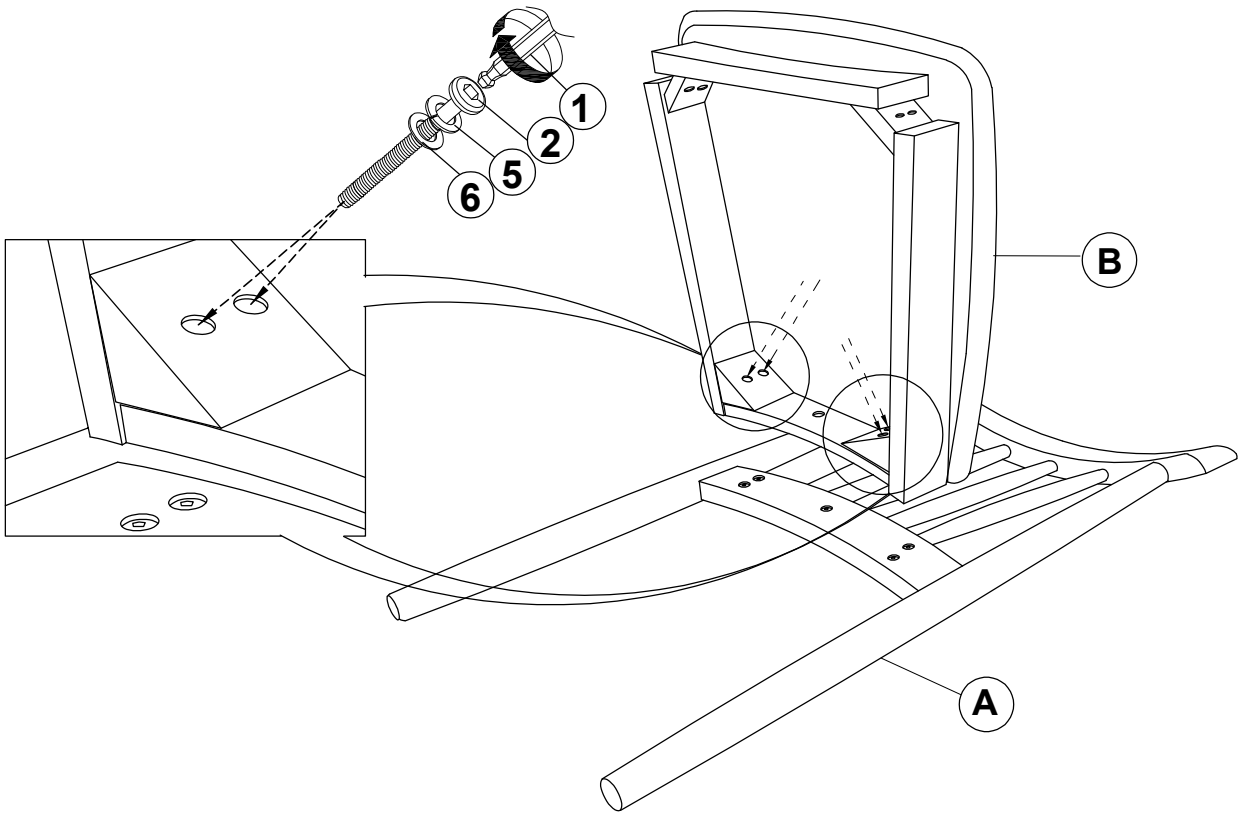


## STEP 2

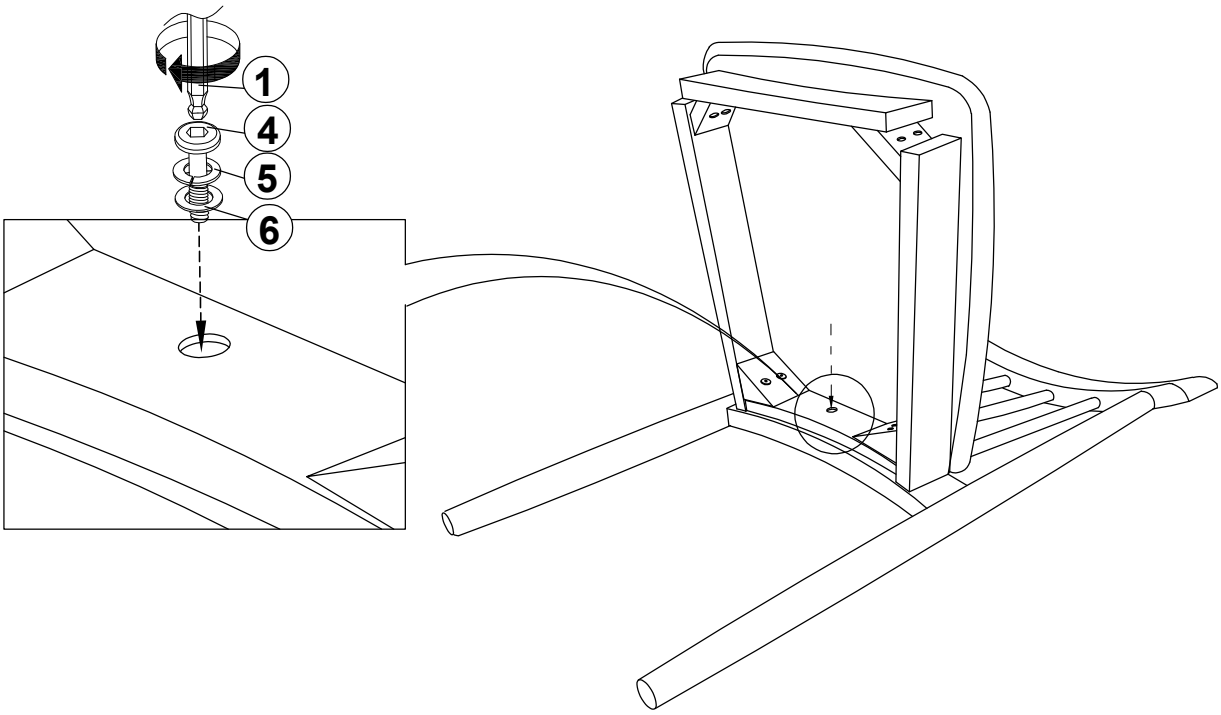

ITEM : **193942NAT**

## ASSEMBLY INSTRUCTIONS

## STEP 3

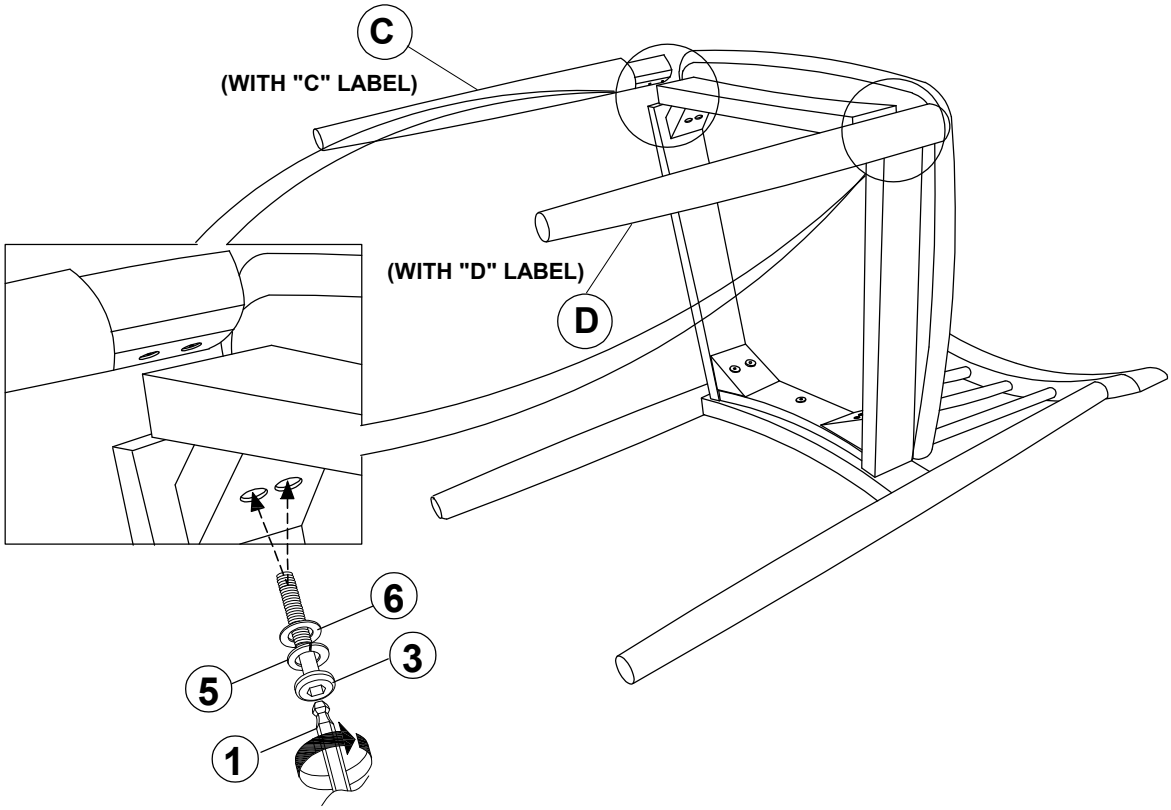


## STEP 4

## COMPLETE

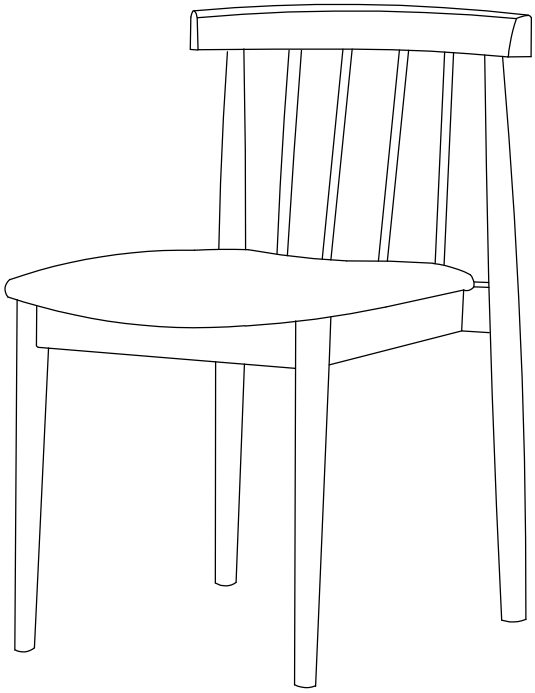

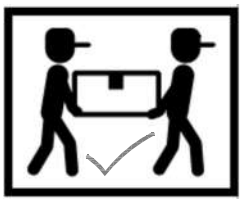

ITEM : **193942NAT**

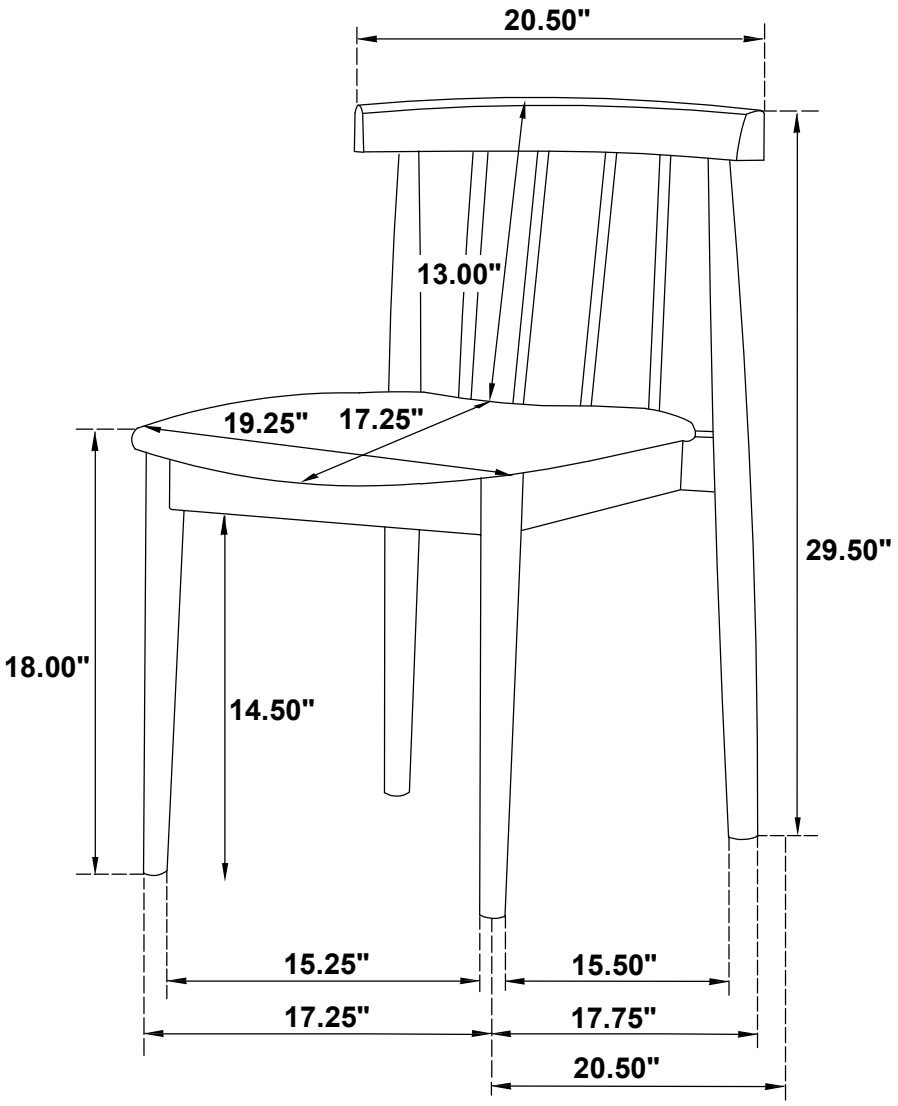


**Note: Dimension tolerance ±5%**