ASSEMBLY INSTRUCTIONS
COASTER FINE FURNITURE

Fine Furniture for every stage of life

224733
Dresser

REVISION 1 : 10/27/2023

COASTERFURNITURE.COM

ITEM: **224733**

ASSEMBLY INSTRUCTIONS

COASTER FINE FURNITURE

ASSEMBLY TIPS:

1. Remove hardware from box and sort by size.
2. Please check to see that all hardware and parts are present prior to start of assembly.
3. Please follow attached instructions in the same sequence as numbered to assure fast & easy assembly.

WARNING!

1. Don't attempt to repair or modify parts that are broken or defective. Please contact the store immediately.
2. This product is for home use only and not intended for commercial establishments.

ASSEMBLY TIME	10 MINUTES

PARTS IDENTIFICATION

A	DRESSER	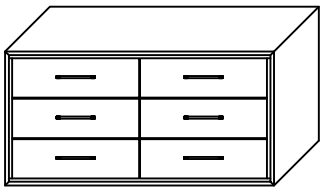	1PC
B	METAL LEG		4PCS
C	CENTER SUPPORT LEG WITH LEVELER		1PC

HARDWARE IDENTIFICATION

1	BOLT (M6 x 15MM - RBW)	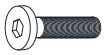	12PCS
2	FLAT WASHER (1/4" x 19MM - RBW)		8PCS
3	ALLEN WRENCH (M4 x 65MM - BLK)		1PC

NOTE:

Phillips head screw driver is required in the assembly process; however, manufacturer does not provided this item.

ITEM: **224733**

ASSEMBLY INSTRUCTIONS

STEP 1

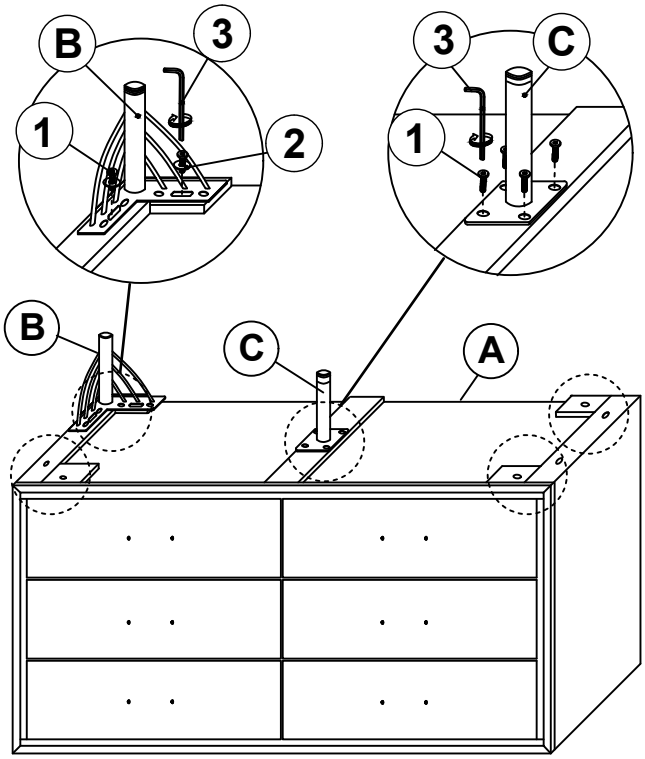

STEP 2

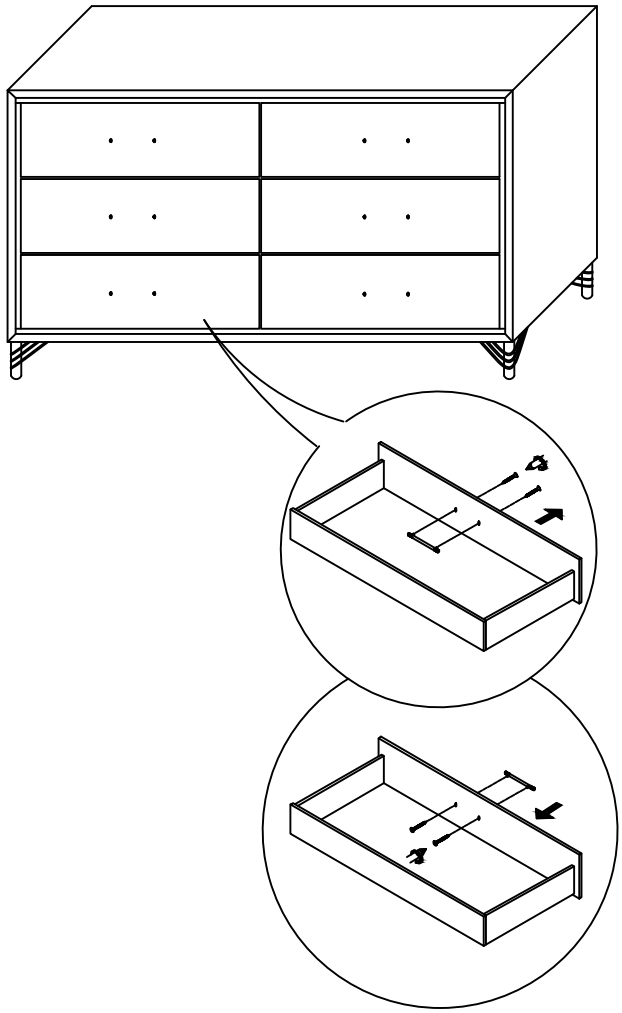

STEP 3

COMPLETE

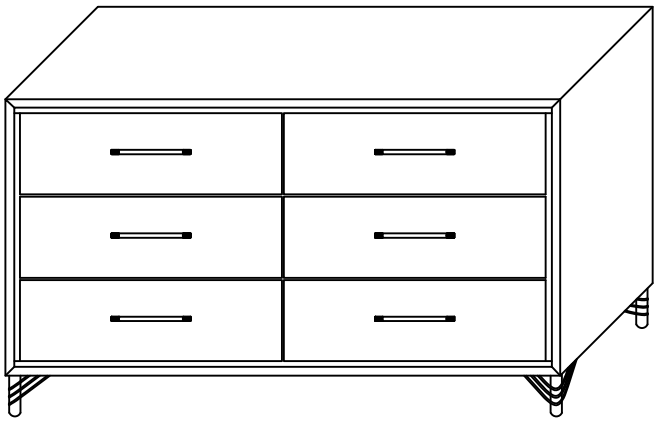

ITEM: **224733**

ANTI-TIPPING INSTALLMENT INSTRUCTIONS
FURNITURE TIPPING RESTRAINT

WARNING

Injury may result from tipping furniture.
This restraint may protect against tipping furniture.
Do not allow children to climb on furniture.
This restraint is not a substitute for proper adult supervision.
Failure to detach this restraint before moving the furniture may result in injury and damage.

1. Attach one of the mounting brackets securely to the back edge of the furniture. Use the short screw.
2. Determine where the furniture is to be placed and mark location on the wall for the mounting bracket screw hole approximately 2" below the bracket mounted to the edge of the furniture.
3. Drill a 3/16" hole in the wall. Press the plastic wall plug into the hole and gently tap until the flange on the wall plug is against the wall surface.
4. Position the bracket over the wall plug and use the long screw to securely attach the bracket to the wall.
5. Place the furniture so the bracket on the back edge is in line with the bracket on the wall.
6. Lace an end of the cable tie down through each bracket. Bring both ends together and slide the beaded end of the cable tie through the keyhole shaped slot on the other end until snug. Pull down on the beaded end until it snap locks into the keyhole slot.
7. To double lock return the beaded end back through the keyhole as shown.
8. Check to make sure the cable tie is securely laced and locked to the brackets.

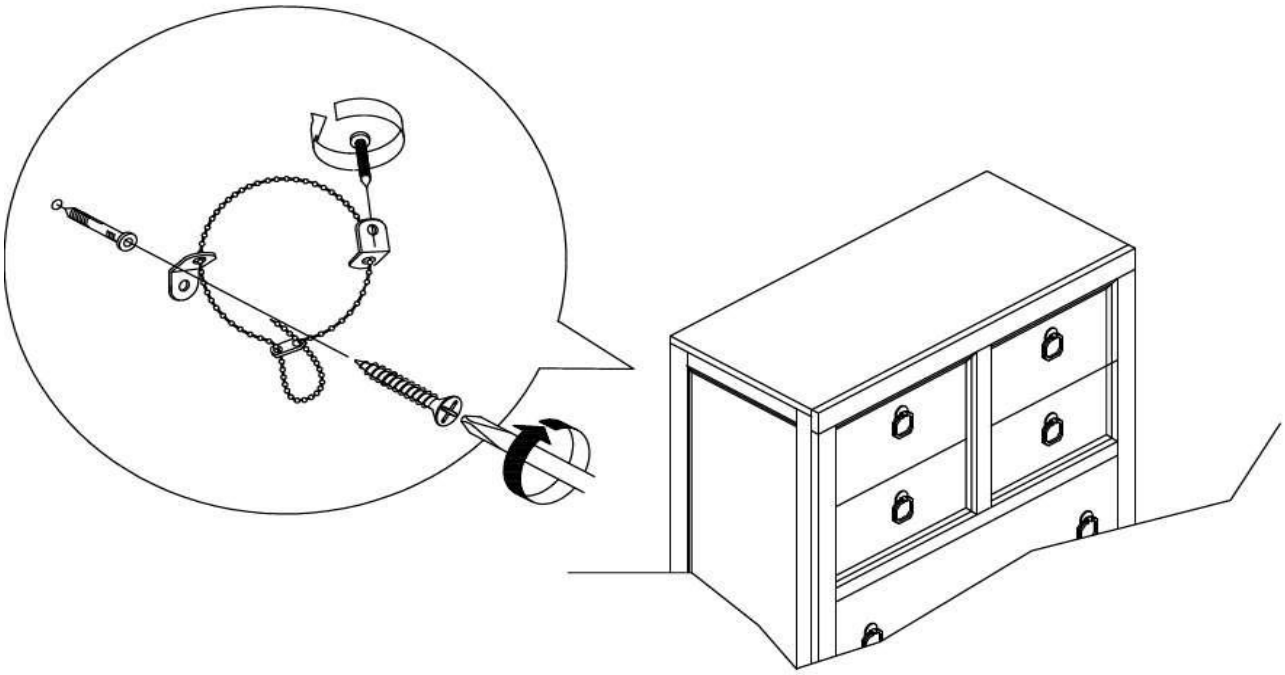

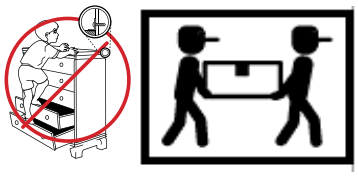

ITEM: **224733**

COASTER FINE FURNITURE

Inner Size of Drawer : 23.00"W X 12.50"D X 5.00"H X 0.50"T

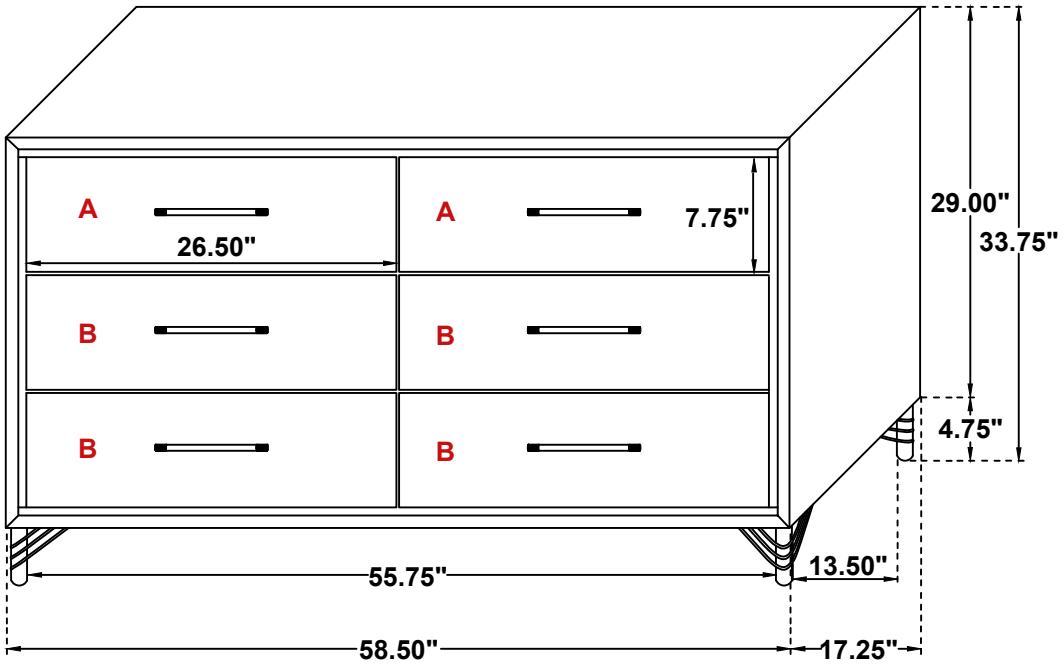

Note : Dimension tolerance ±5%