ASSEMBLY INSTRUCTIONS
COASTER FINE FURNITURE

Fine Furniture for every stage of life

310035T(B1&B2)
Twin Bed

REVISION 0 : 04/15/2026

COASTERFURNITURE.COM

ITEM: 310035T(B1&B2)

ASSEMBLY INSTRUCTIONS

COASTER FINE FURNITURE

ASSEMBLY TIPS:

1. Remove hardware from box and sort by size.
2. Please check to see that all hardware and parts are present prior to start of assembly.
3. Please follow attached instructions in the same sequence as numbered to assure fast & easy assembly.

WARNING!

1. Don't attempt to repair or modify parts that are broken or defective. Please contact the store immediately.
2. This product is for home use only and not intended for commercial establishments.

ASSEMBLY TIME	15 MINUTES

PARTS IDENTIFICATION

B1(BOX 1)

A	HEADBOARD		1PC
B	FOOTBOARD	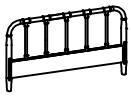	1PC
D	BED SLAT	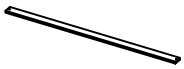	4PCS

B2(BOX 2)

C	BED RAIL		2PCS

HARDWARE IDENTIFICATION

Z-B1(BOX 1) - HARWARE PACK IS LOCATED IN 310035T(B1)

1	FLAT HEAD SCREW (Ø4" x 1 1/4" - RBW)	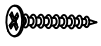	8PCS

NOTE :

Phillips head screw driver is required in the assembly process; However, manufacturer not provide this item.

ITEM: **310035T(B1&B2)**

ASSEMBLY INSTRUCTIONS

COASTER FINE FURNITURE

STEP 1

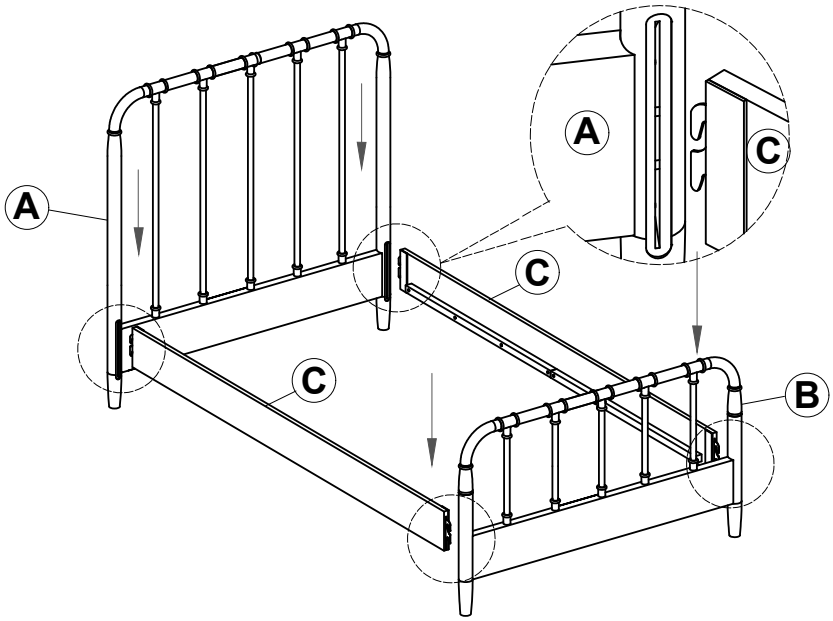

STEP 2

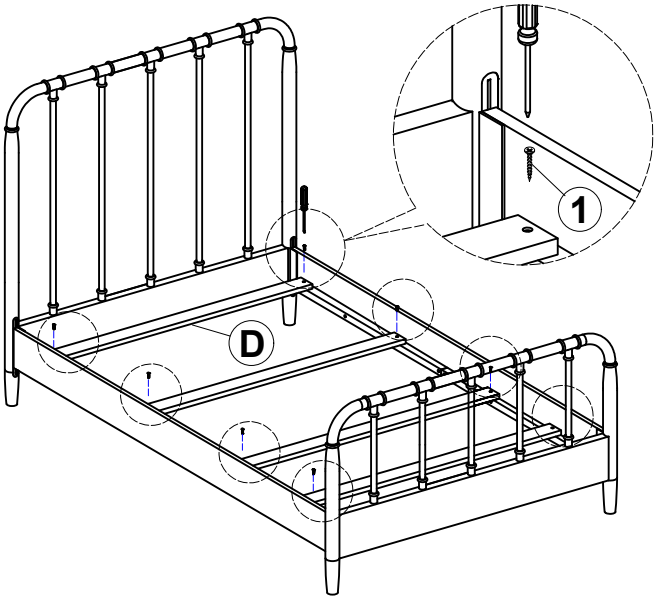

STEP 3

COMPLETE

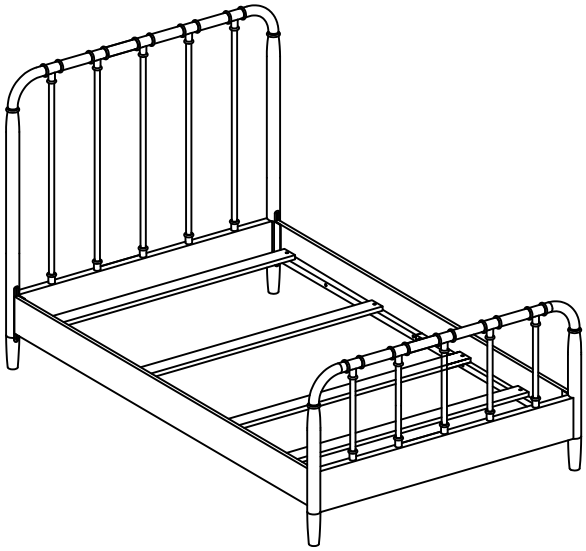

ITEM: 310035T(B1&B2)

Inner Size: 40.25"W x 76.00"D

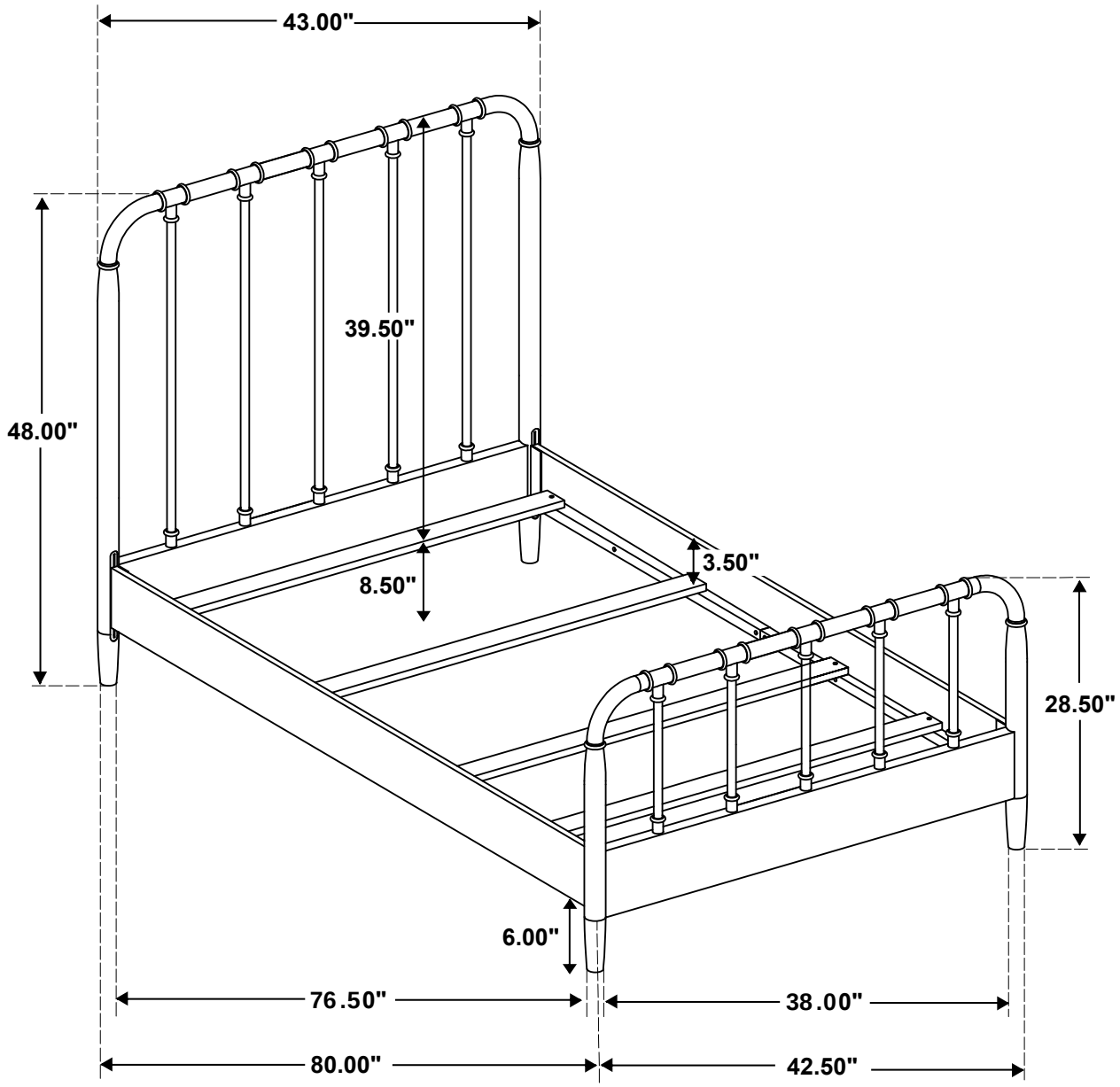

Note: Dimension tolerance ± 5%