COASTER®
FINE FURNITURE

ASSEMBLY INSTRUCTIONS
COASTER FINE FURNITURE

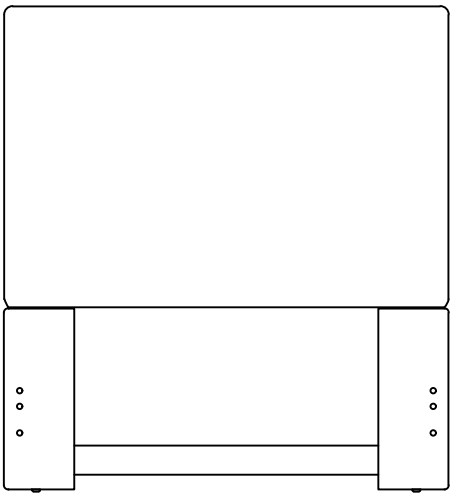

Fine Furniture for every stage of life

315985T
Twin Headboard

REVISION 0: 12/20/2021
REVISION 1: 06/08/2023

COASTERFURNITURE.COM

ITEM:**315985T**

COASTER®
FINE FURNITURE

ASSEMBLY INSTRUCTIONS

ASSEMBLY TIPS:

1. Remove hardware from box and sort by size.
2. Please check to see that all hardware and parts are present prior to start of assembly.
3. Please follow attached instructions in the same sequence as numbered to assure fast & easy assembly.

WARNING!

1. Don't attempt to repair or modify parts that are broken or defective. Please contact the store immediately.
2. This product is for home use only and not intended for commercial establishments.

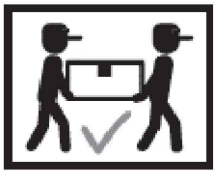

ASSEMBLY TIME | 15 MINUTES

PARTS IDENTIFICATION

A HEADBOARD PANEL — 1PC

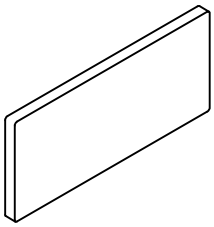

B LEFT LEG — 1PC

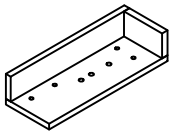

C RIGHT LEG — 1PC

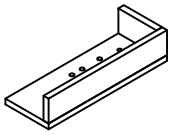

D WOOD CLEAT — 2PCS

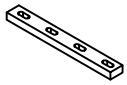

E HEADBOARD BOTTOM RAIL — 1PC

HARDWARE IDENTIFICATION

1 ALLEN WRENCH (4MM-RBW) — 1PC

2 BIG LOCK WASHER (Ø 5/16 "-RBW) — 12PCS

3 BIG BOLT (Ø 5/16 "X38mm-RBW) — 12PCS

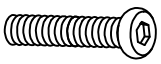

4 BIG FLAT WASHER (Ø 5/16 "-RBW) — 12PCS

5 HEX NUT (1/4"x10mm) — 6PCS

6 WRENCH (10MM-RBW) — 1PC

7 SMALL BOLT (Ø 1/4 "X38mm-RBW) — 6PCS

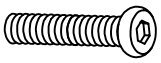

8 SMALL LOCK WASHER (Ø 1/4 "-RBW) — 12PCS

9 SMALL FLAT WASHER (Ø 1/4 "-RBW) — 12PCS

ITEM:**315985T**

COASTER®
FINE FURNITURE

ASSEMBLY INSTRUCTIONS

STEP 1

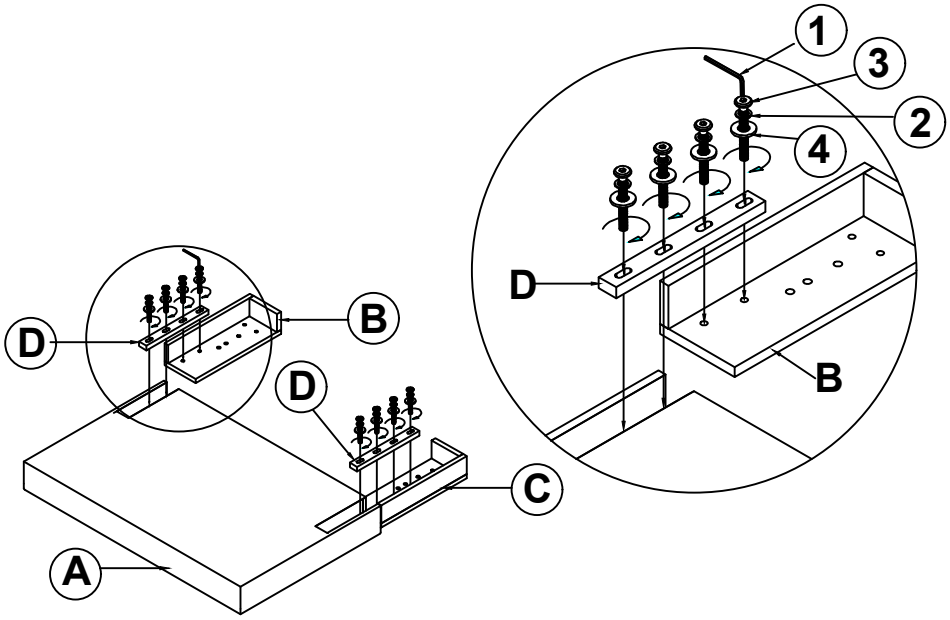

STEP 2

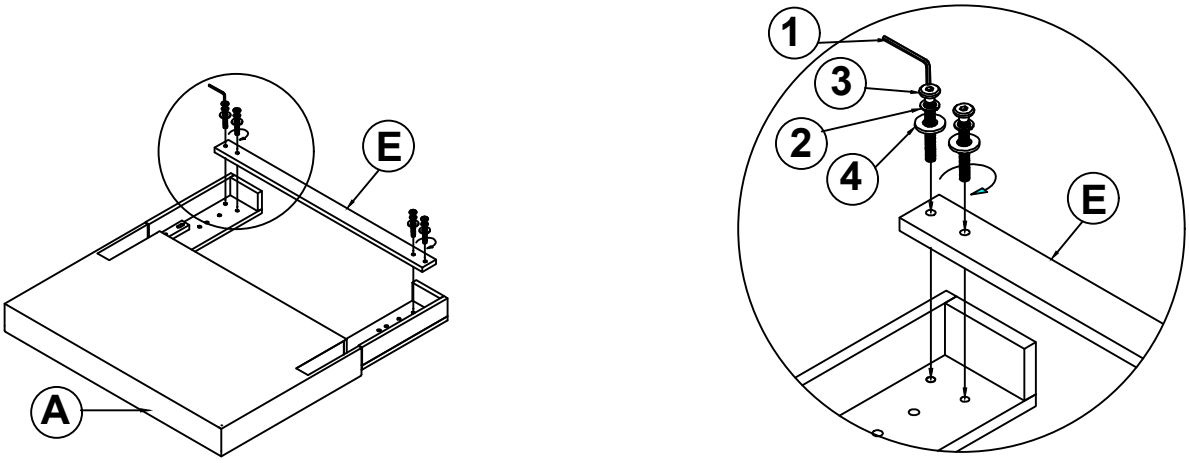

STEP 3

COMPLETE

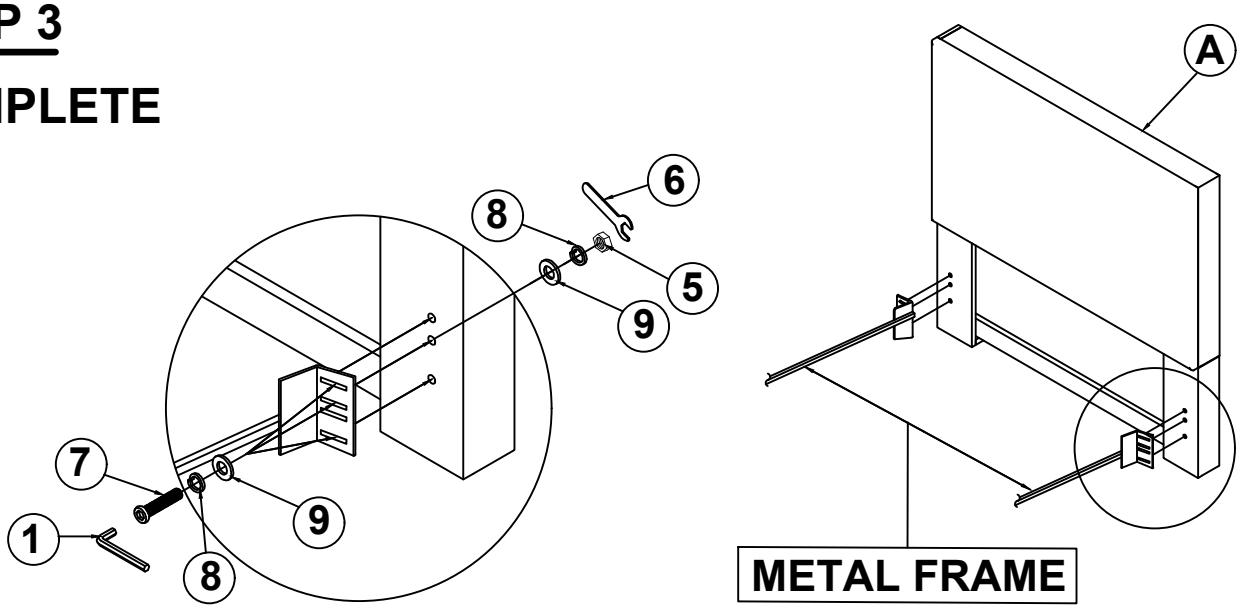

ITEM:**315985T**

COASTER®
FINE FURNITURE

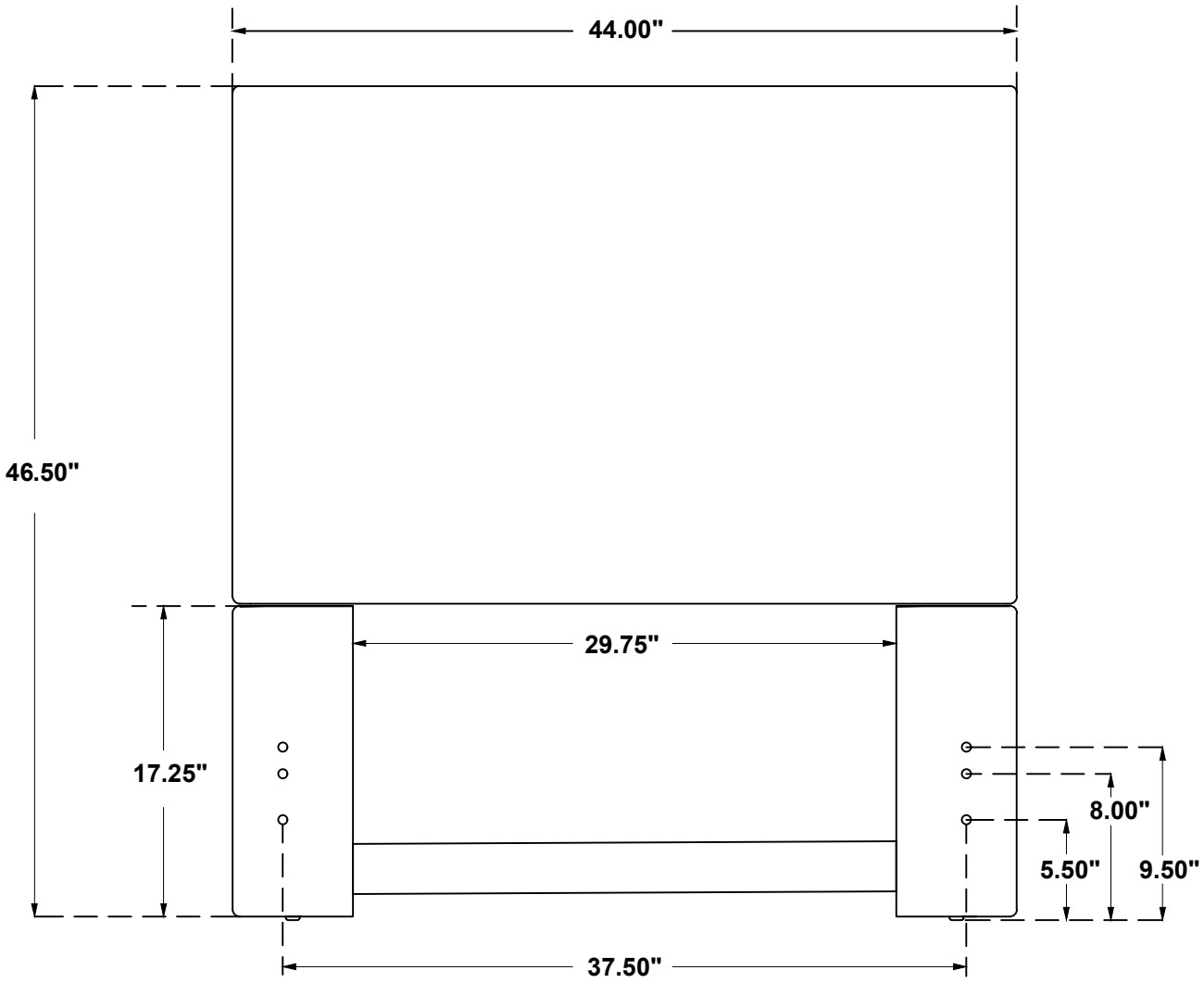

Note:Dimension tolerance±5%