ASSEMBLY INSTRUCTIONS
COASTER FINE FURNITURE

Fine Furniture for every stage of life

360234
Sofa Bed

ITEM: 360234

ASSEMBLY INSTRUCTIONS

ASSEMBLY TIPS:

1. Remove hardware from box and sort by size.
2. Please check to see that all hardware and parts are present prior to start of assembly.
3. Please follow attached instructions in the same sequence as numbered to assure fast & easy assembly.

WARNING!

1. Don't attempt to repair or modify parts that are broken or defective . Please contact the store immediately
2. This product is for home use only and not intended for commercial establishments.

ASSEMBLY TIME	5 MINUTES

PARTS IDENTIFICATION

A	SOFA BED	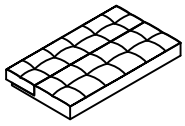	1PC
B	LEG		4PCS

HARDWARE IDENTIFICATION

1	PLASTIC WASHER (Ø50* 2MM - BLK)		4PCS

ITEM: 360234

ASSEMBLY INSTRUCTIONS

STEP 1

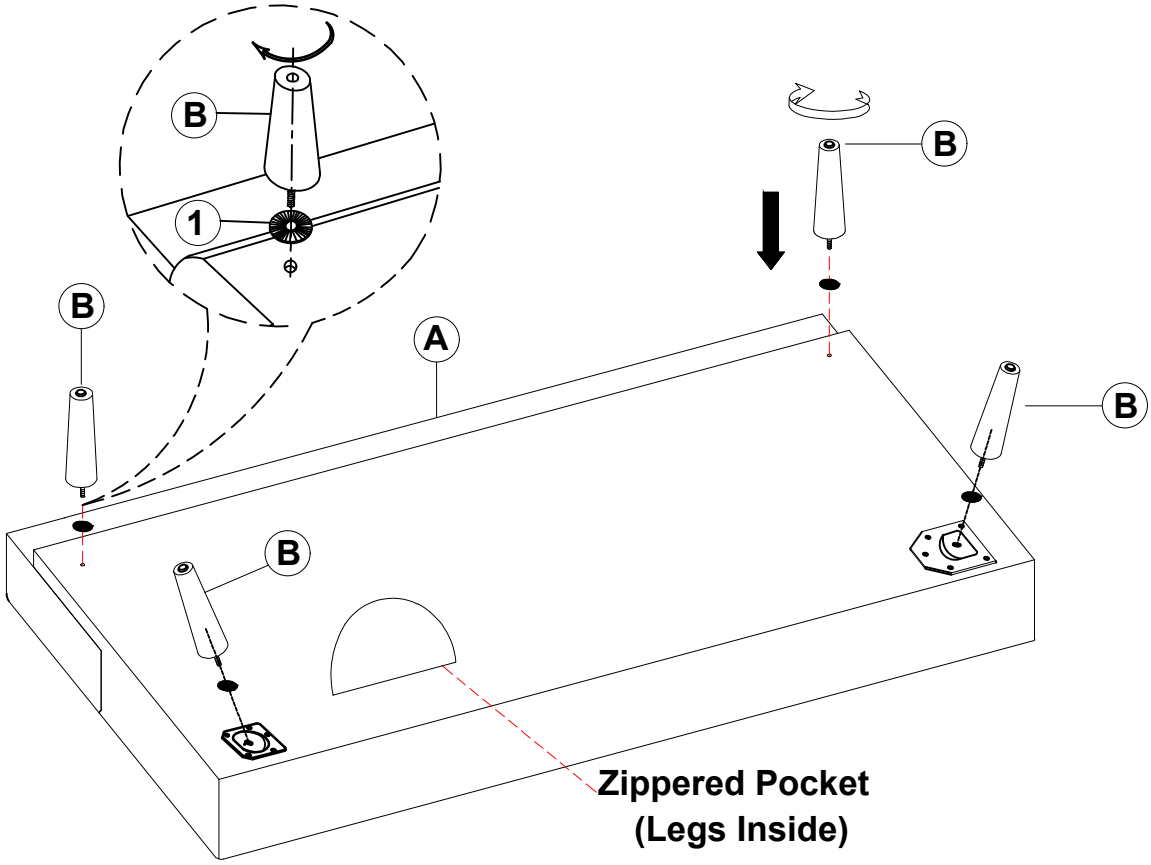

STEP 2

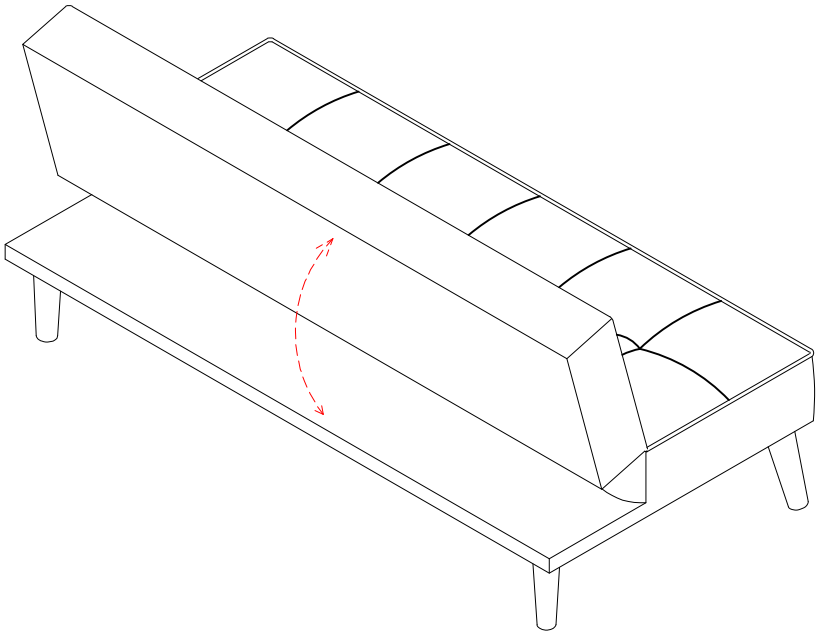

ITEM: **360234**

ASSEMBLY INSTRUCTIONS

STEP 3

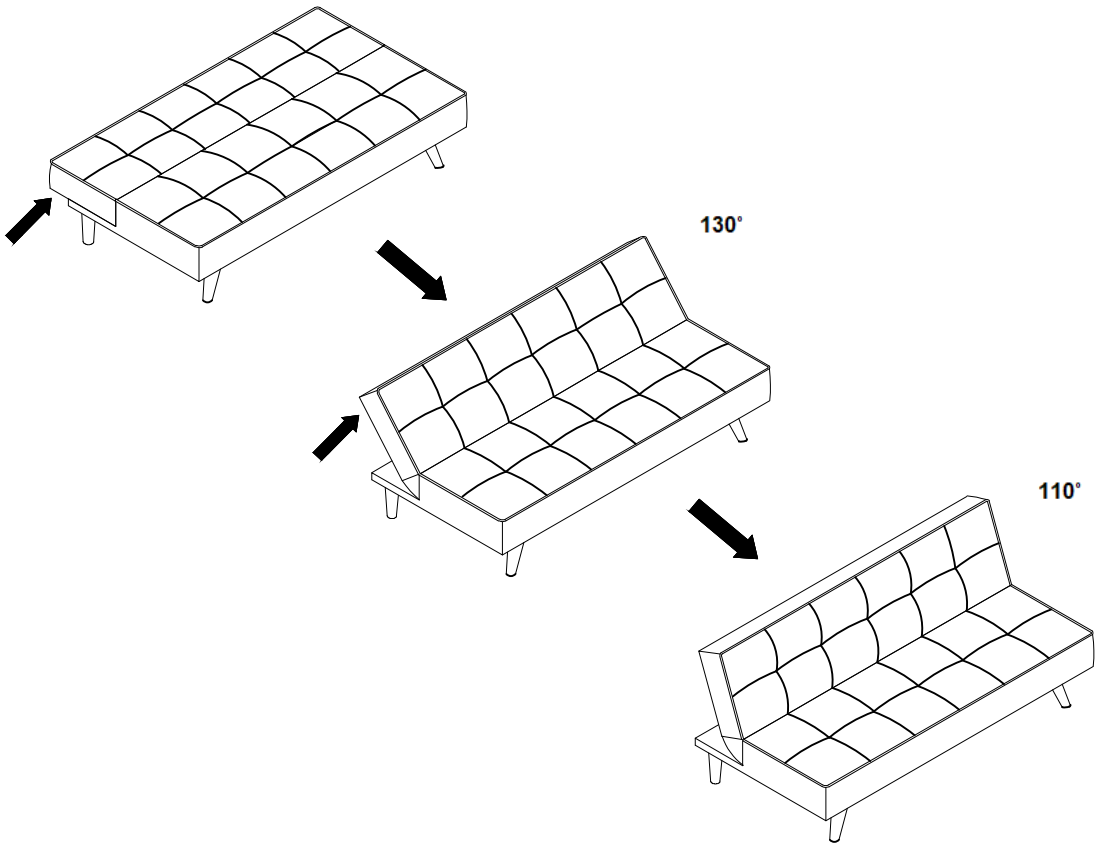

STEP 4

COMPLETE

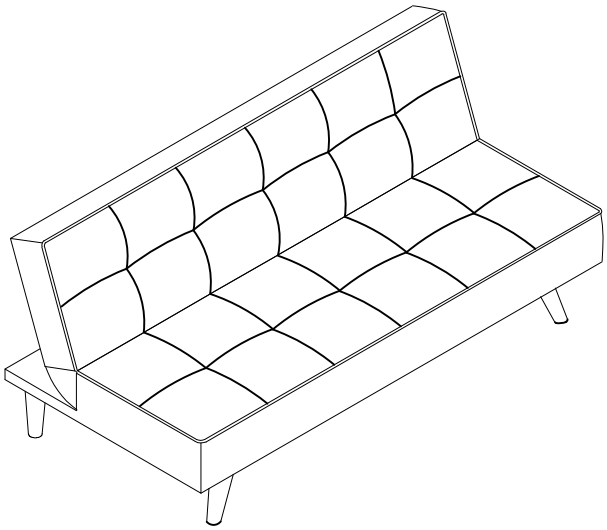

ITEM: **360234**

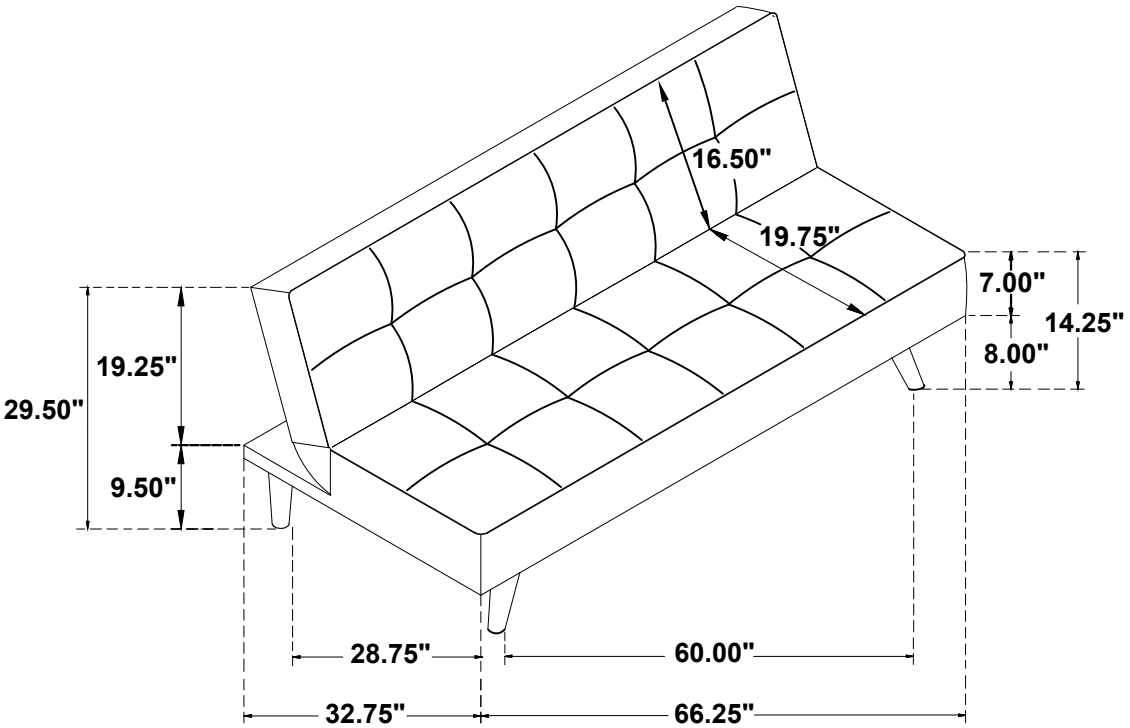

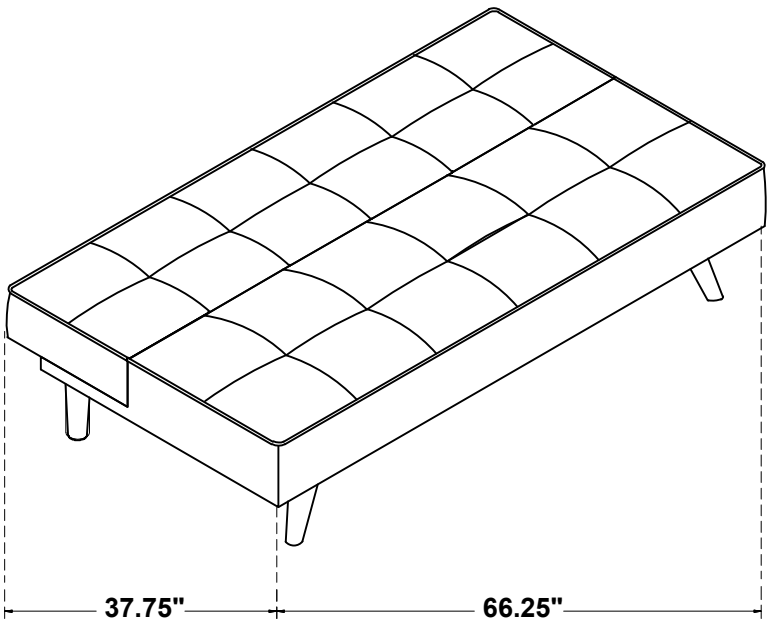

Note: Dimension tolerance ±5%