ASSEMBLY INSTRUCTIONS

COASTER FINE FURNITURE

Fine Furniture for every stage of life

600570ARPPP

TRI POWER ARMLESS RECLINER

REVISION 0: 08/24/2026
REVISION 1: 09/08/2026

ITEM :600570ARPPP

ASSEMBLY INSTRUCTIONS

ASSEMBLY TIPS:

1.Remove hardware from box and sort by size.
2.Please check to see that all hardware and parts are present prior to start of assembly.
3.Please follow attached instruction in the same sequence as numbered to assure fast & easy assembly.

WARNING!
1.Don't attempt to repair or modify parts that are broken or defective. Please contact the store immediately.
2.This product is for home use only and not intended for commercial establishment.

ASSEMBLY TIME	2 MINUTES

PARTS IDENTIFICATION

A BACK 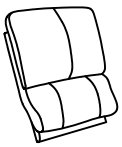 **1 PC**

B BASE 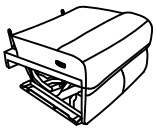 **1 PC**

C PLUG-IN POWER SUPPLY **1 PC**

ITEM :600570ARPPP

ASSEMBLY INSTRUCTIONS

COASTER FINE FURNITURE

STEP 1

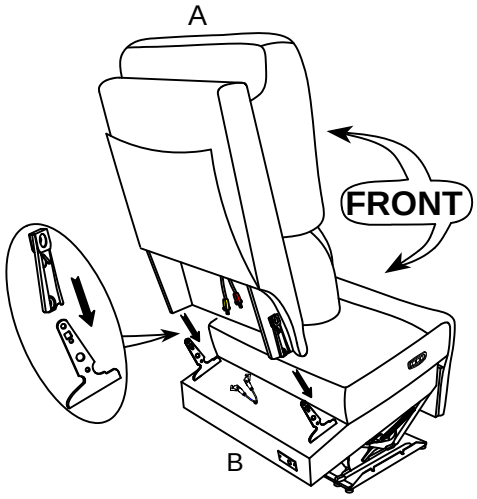

STEP 2

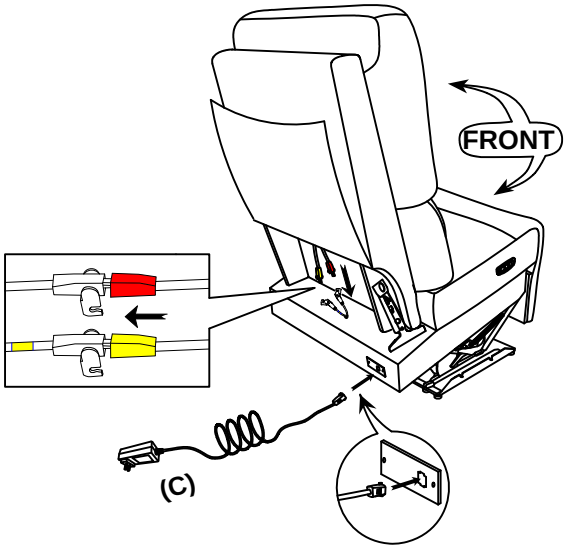

STEP 3

COMPLETE

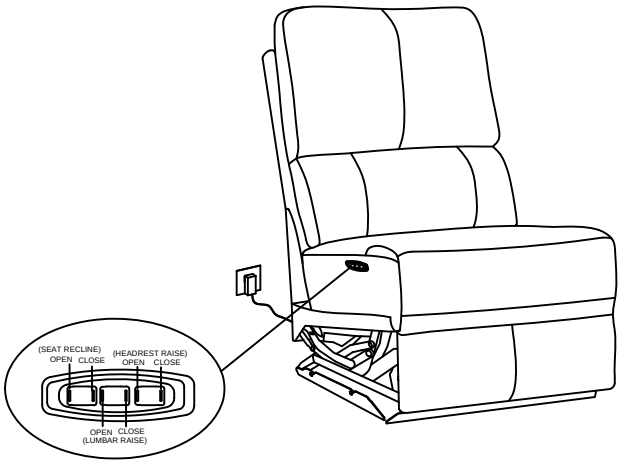

STEP 4

OPTION1:

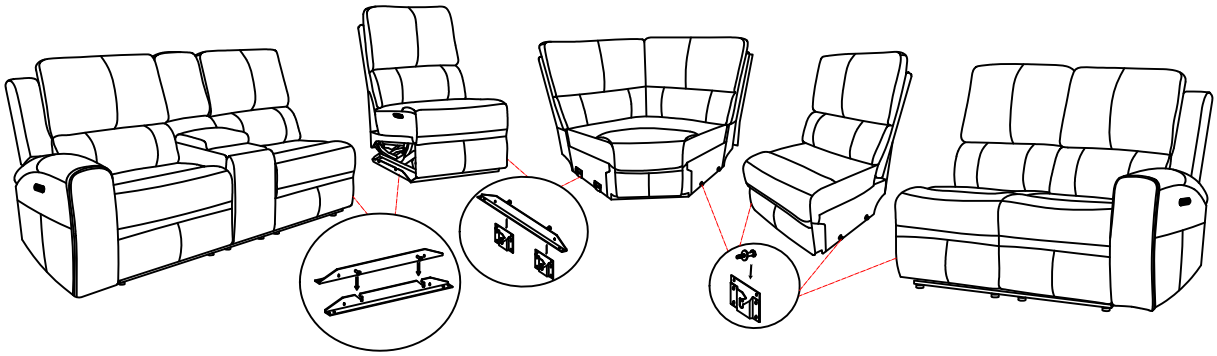

OPTION2:

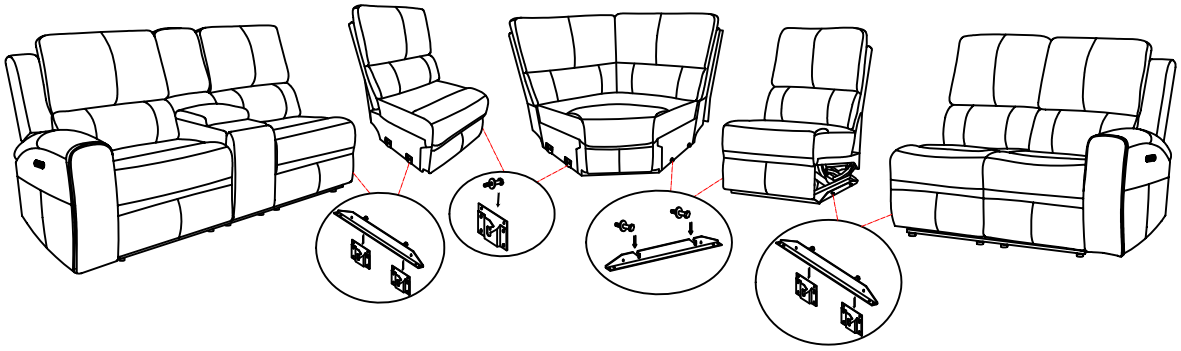

STEP 5

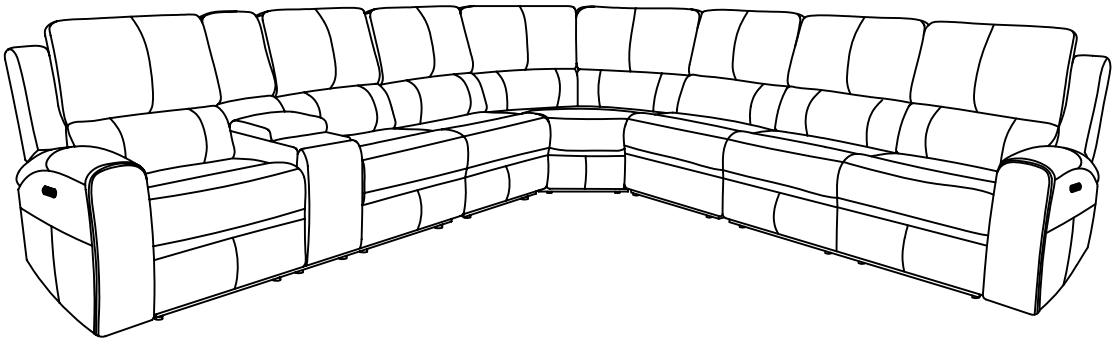

ITEM :600570ARPPP

Please follow below steps to install the 9V batteries when there is no power to operate the motion sofa.(Any model of 9V battery is applicable)

STEP 1

Open the marked battery door on the backup battery box.

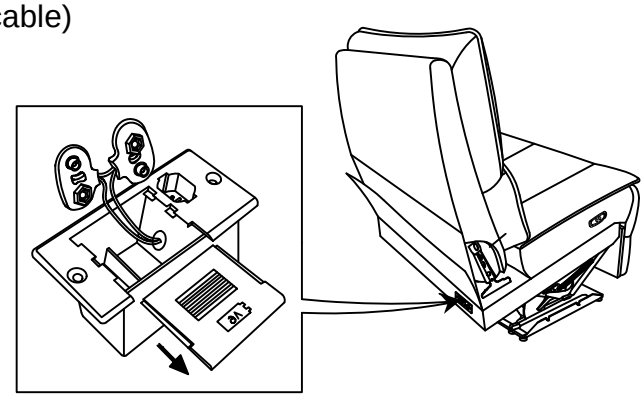

STEP 2

Install two 9V batteries in the backup battery box.(batteries are not included)

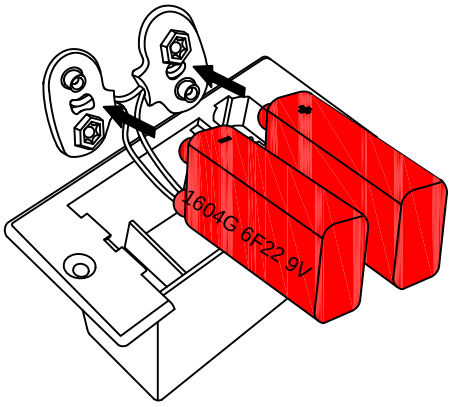

STEP 3

Push the batteries in.

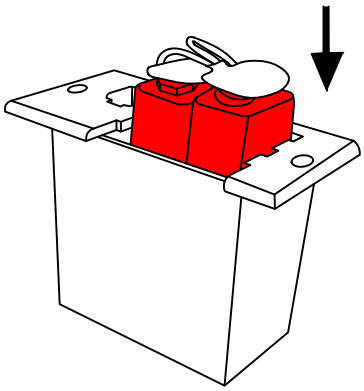

STEP 4

Close the box door.

Notice: Please don't keep the battery in the box when the power motion sofa is under daily use with power supply.

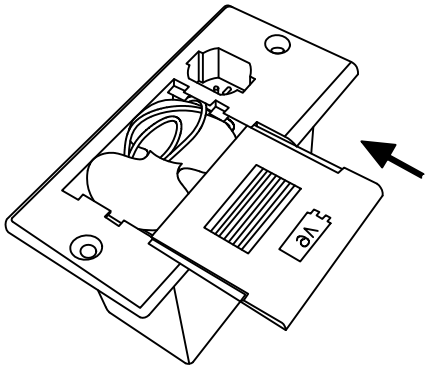

ITEM :600570ARPPP

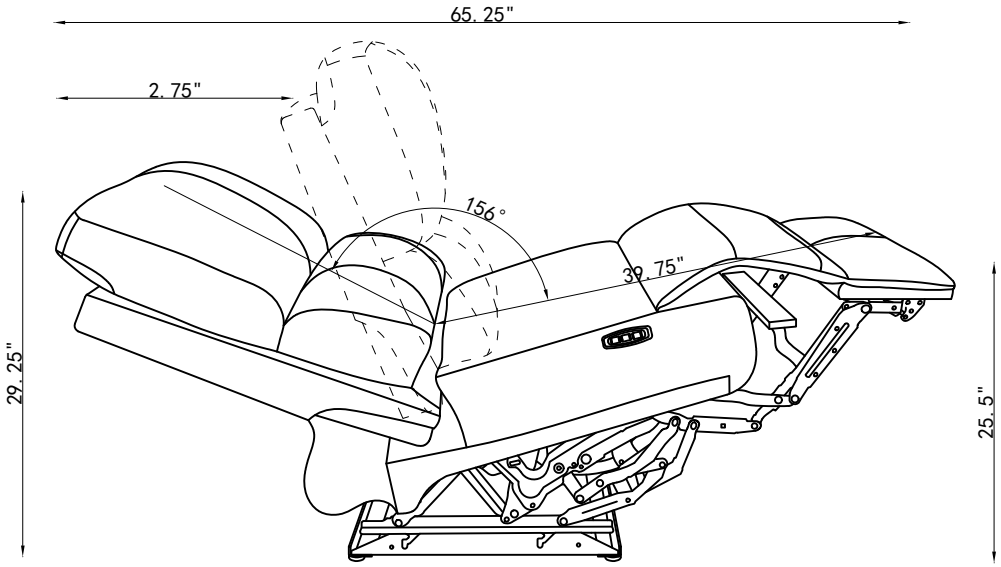

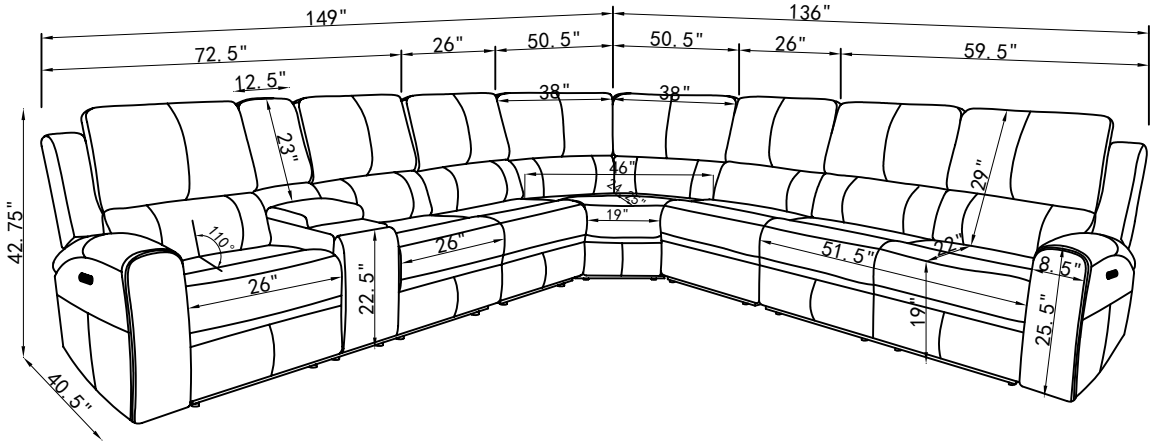

Note: Dimension tolerance +5%