# ASSEMBLY INSTRUCTIONS

*COASTER FINE FURNITURE*

*Fine Furniture for every stage of life*

609690LRP
LAF POWER RECLINER

**ITEM :609690LRP**

**ASSEMBLY INSTRUCTIONS**

## ASSEMBLY TIPS:

1.Remove hardware from box and sort by size.
2.Please check to see that all hardware and parts are present prior to start of assembly.
3.Please follow attached instruction in the same sequence as numbered to assure fast & easy assembly.

WARNING!
1.Don't attempt to repair or modify parts that are broken or defective. Please contact the store immediately.
2.This product is for home use only and not intended for commercial establishment.

| | |
|---|---|
| ASSEMBLY TIME | 2 MINUTES |

## PARTS IDENTIFICATION

**A BACK** **1 PC**

**B BASE** 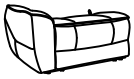 **1 PC**

**C PLUG-IN POWER SUPPLY** **1 PC**

**D Y CABLE** **1 PC**

**ITEM :609690LRP**

**ASSEMBLY INSTRUCTIONS**

## STEP 1

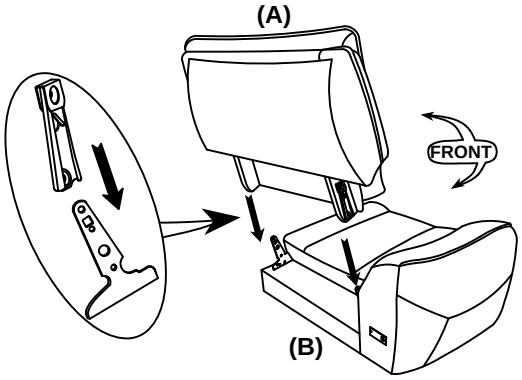


## STEP 2

**COMPLETE**

## STEP 3

**OPTION1:**

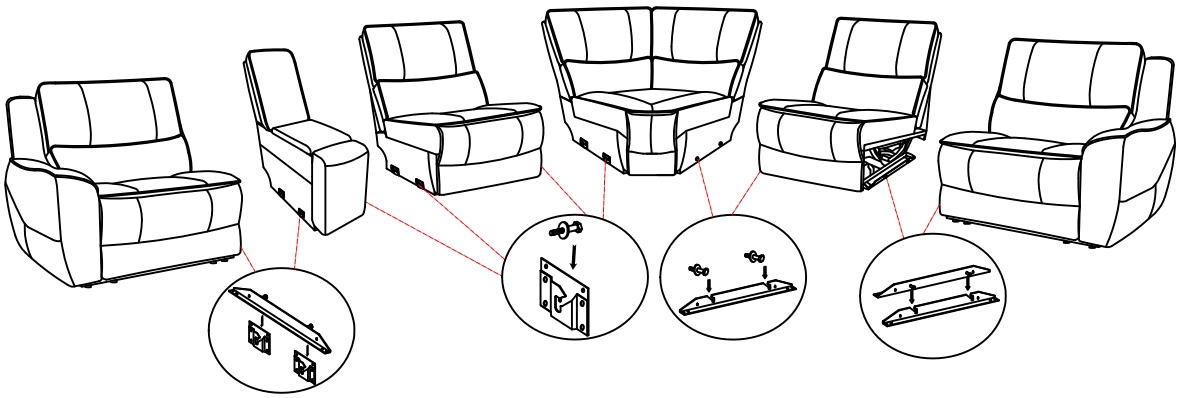

**OPTION2:**

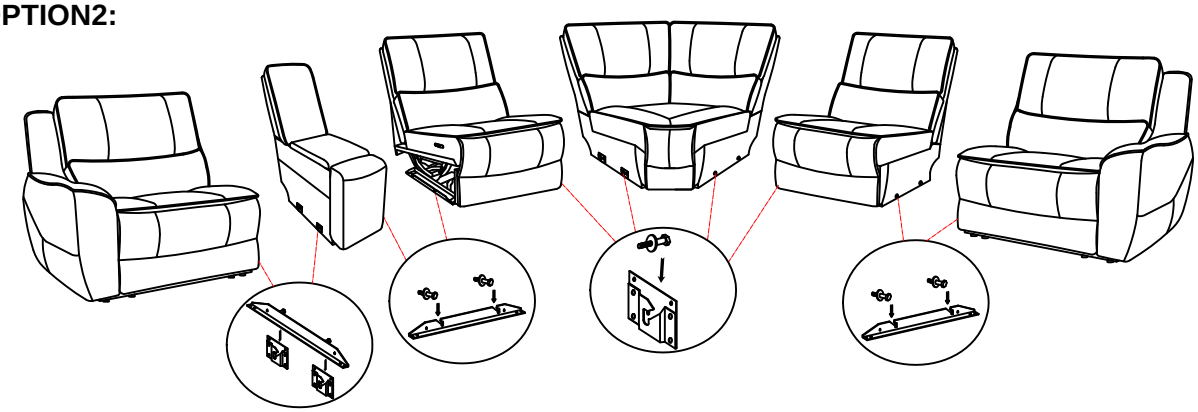

## STEP 4

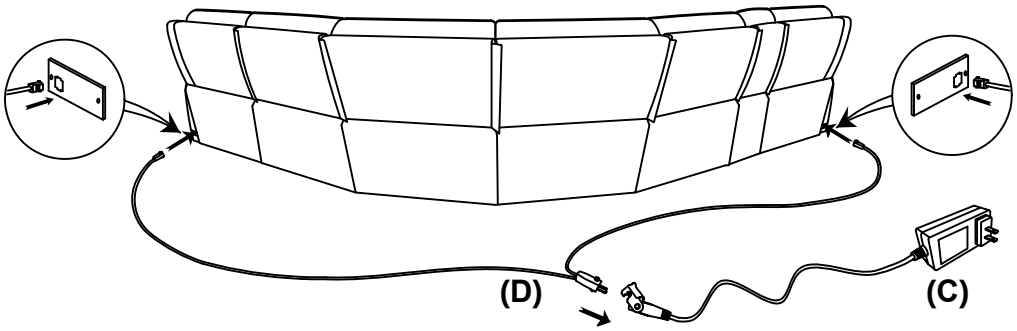


## STEP 5

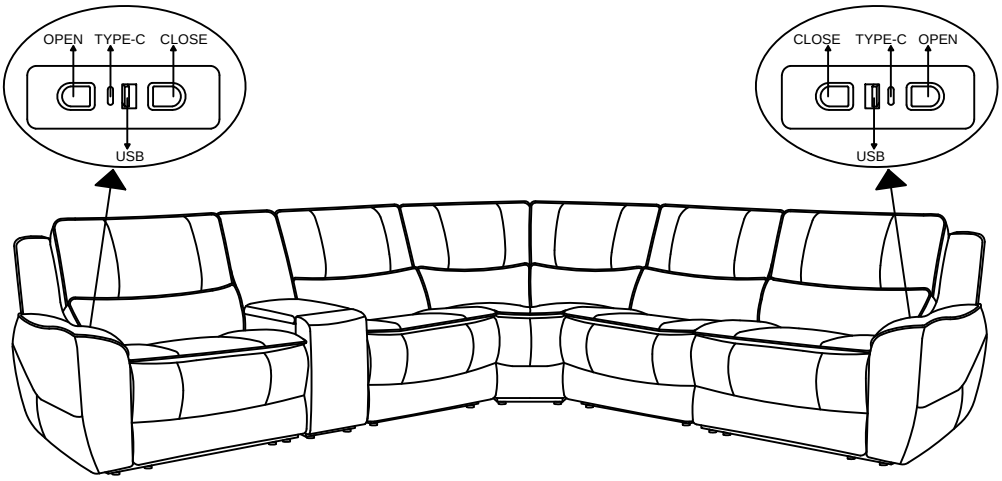

**ITEM :609690LRP**

Please follow below steps to install the 9V batteries when there is no power to operate the motion sofa.(Any model of 9V battery is applicable)

STEP 1

Open the marked battery door on the backup battery box.

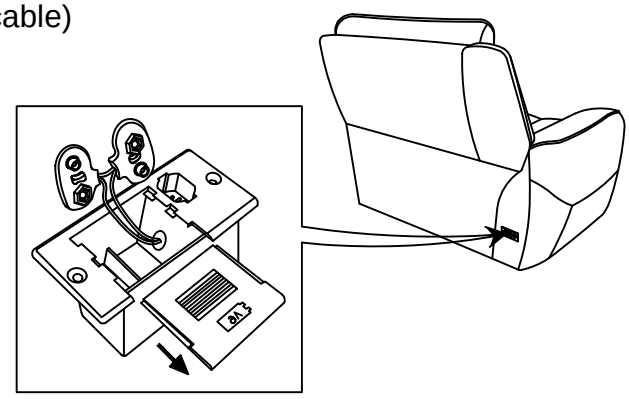

STEP 2

Install two 9V batteries in the backup battery box.(batteries are not included)

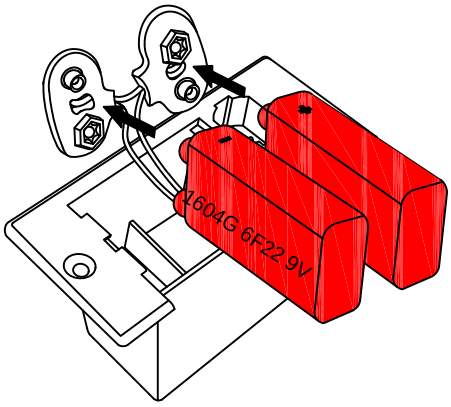


STEP 3

Push the batteries in.

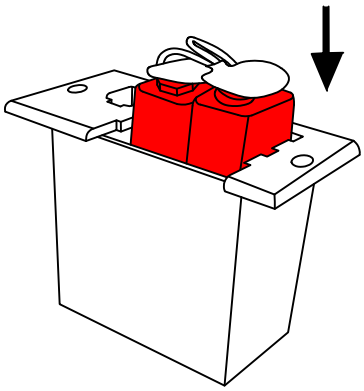

STEP 4

Close the box door.

Notice: Please don't keep the battery in the box when the power motion sofa is under daily use within power supply.

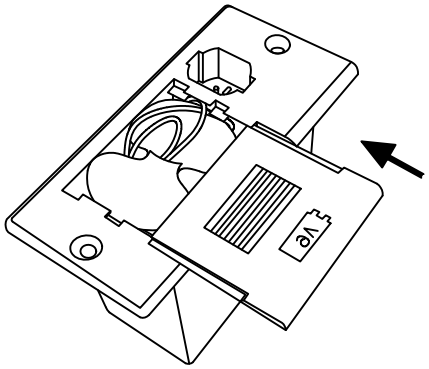

**ITEM :609690LRP**

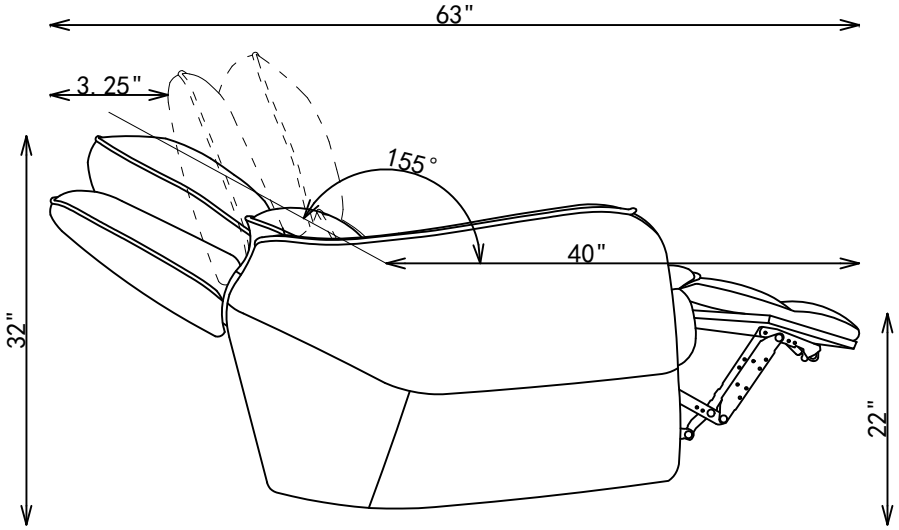


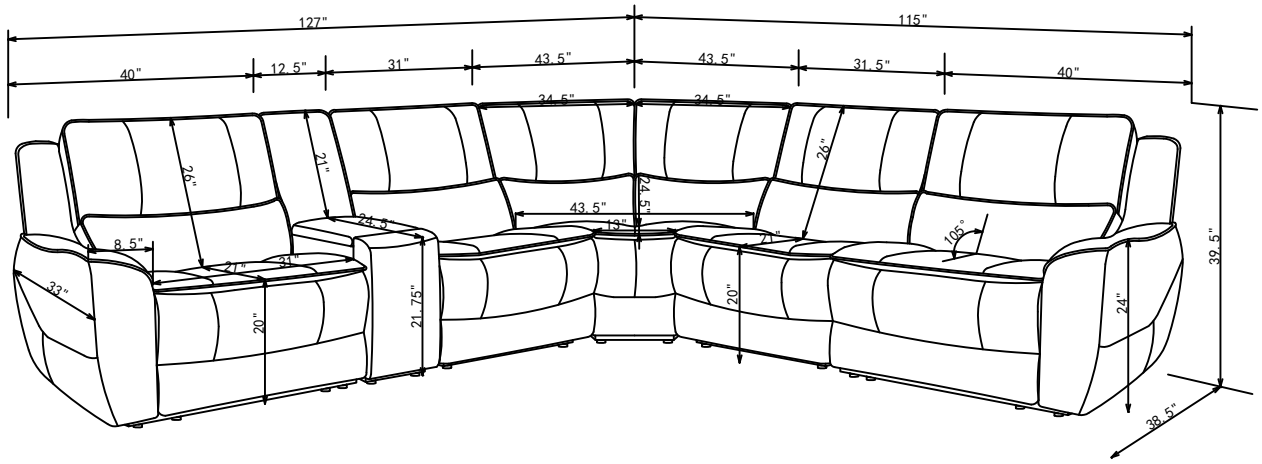


**Note: Dimension tolerance +5%**

# ASSEMBLY INSTRUCTIONS

*COASTER FINE FURNITURE*

*Fine Furniture for every stage of life*

609690CON
CONSOLE

**ITEM :609690CON**

**ASSEMBLY INSTRUCTIONS**

## ASSEMBLY TIPS:

1.Remove hardware from box and sort by size.
2.Please check to see that all hardware and parts are present prior to start of assembly.
3.Please follow attached instruction in the same sequence as numbered to assure fast & easy assembly.

WARNING!
1.Don't attempt to repair or modify parts that are broken or defective. Please contact the store immediately.
2.This product is for home use only and not intended for commercial establishment.

| | |
|---|---|
| ASSEMBLY TIME | 2 MINUTES |

## PARTS IDENTIFICATION

**A BACK** **1 PC**

**B BASE OF CONSOLE** 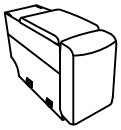 **1 PC**

ITEM :609690CON

ASSEMBLY INSTRUCTIONS

## STEP 1

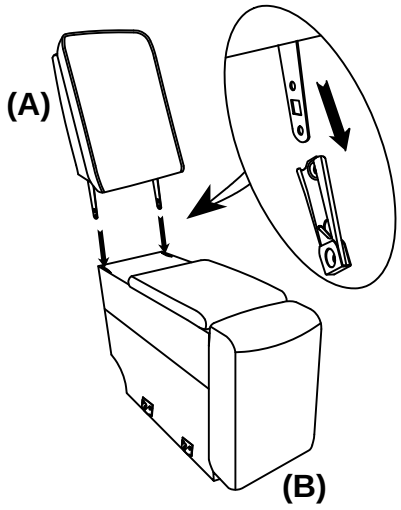


## STEP 2

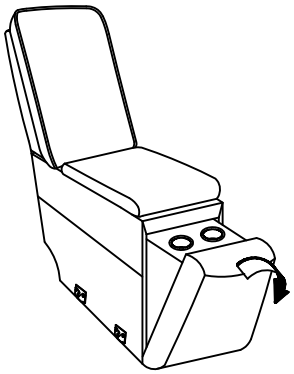

## STEP 3

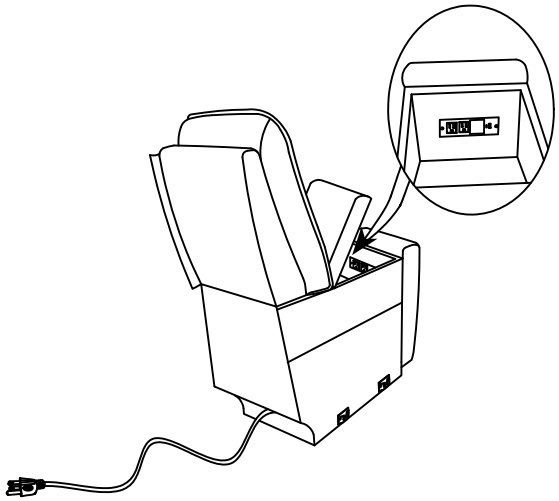

## STEP 4

COMPLETE

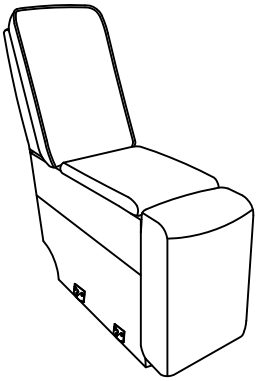

## STEP 5

**OPTION1:**

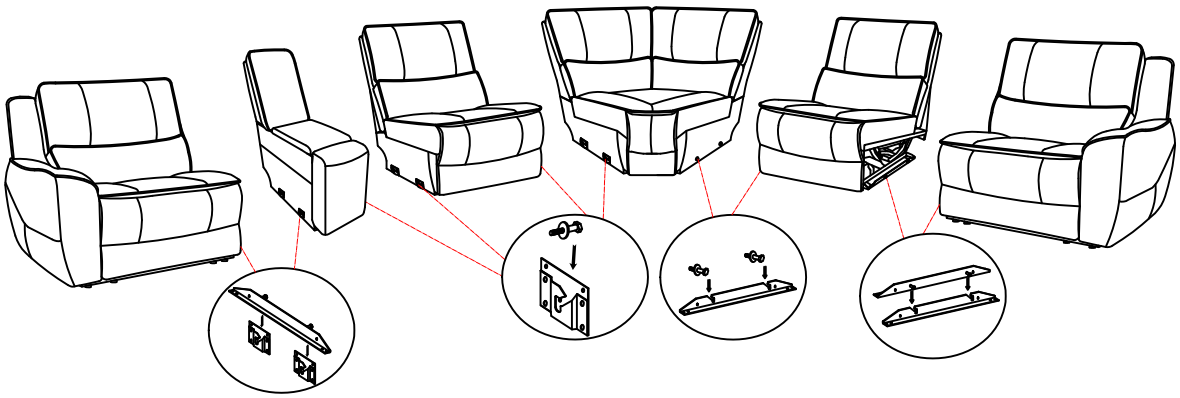

**OPTION2:**

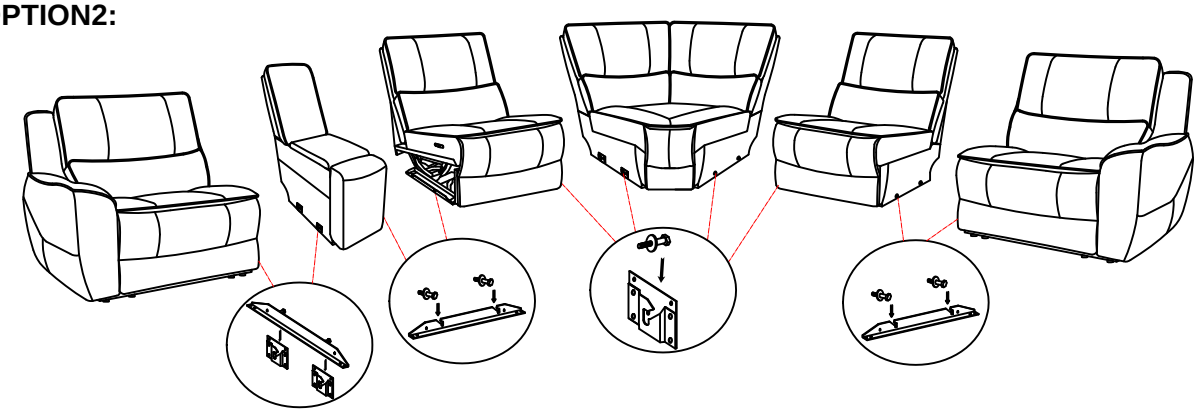

## STEP 6

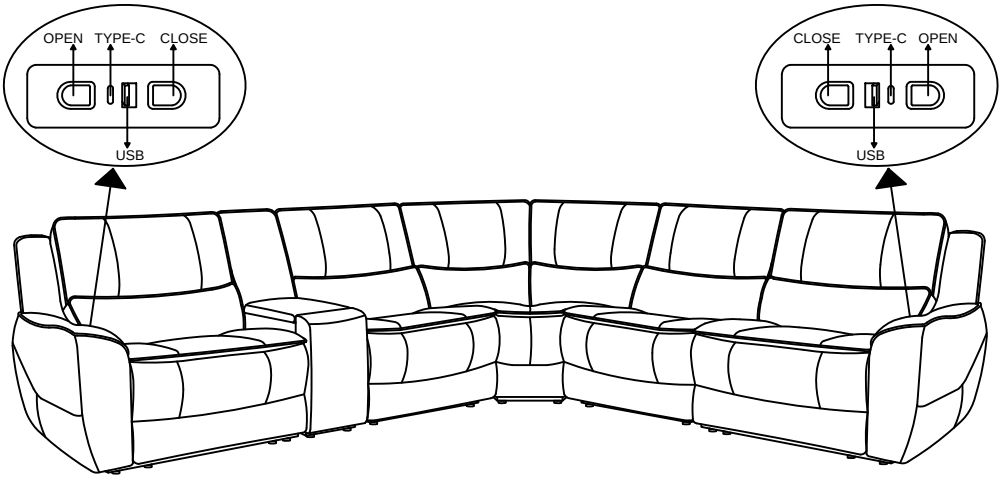

**ITEM :609690CON**

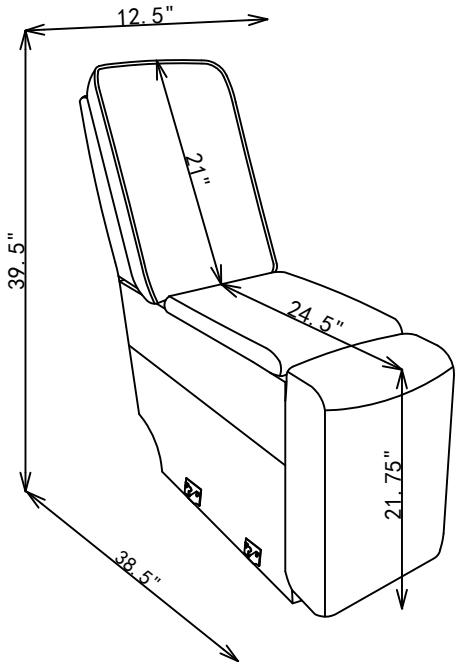


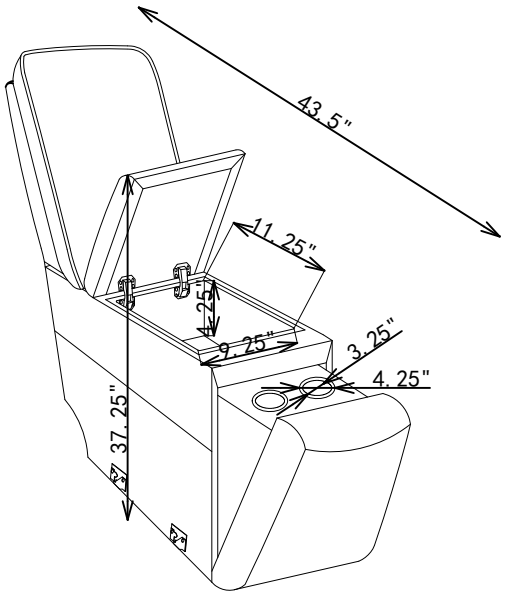


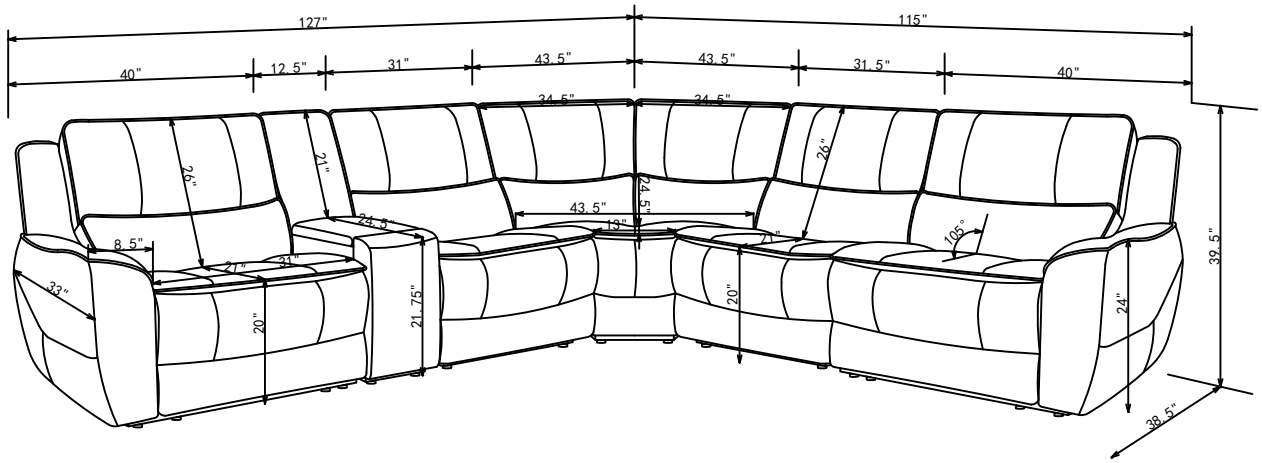


**Note: Dimension tolerance +5%**

ASSEMBLY INSTRUCTIONS

*COASTER FINE FURNITURE*

*Fine Furniture for every stage of life*

609690RRP

RAF POWER RECLINER

**ITEM :609690RRP**

**ASSEMBLY INSTRUCTIONS**

## ASSEMBLY TIPS:

1.Remove hardware from box and sort by size.
2.Please check to see that all hardware and parts are present prior to start of assembly.
3.Please follow attached instruction in the same sequence as numbered to assure fast & easy assembly.

WARNING!
1.Don't attempt to repair or modify parts that are broken or defective. Please contact the store immediately.
2.This product is for home use only and not intended for commercial establishment.

| | |
|---|---|
| ASSEMBLY TIME | 2 MINUTES |

## PARTS IDENTIFICATION

**A BACK** 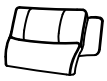 **1 PC**

**B BASE** 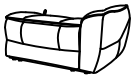 **1 PC**

ITEM :609690RRP

ASSEMBLY INSTRUCTIONS

## STEP 1

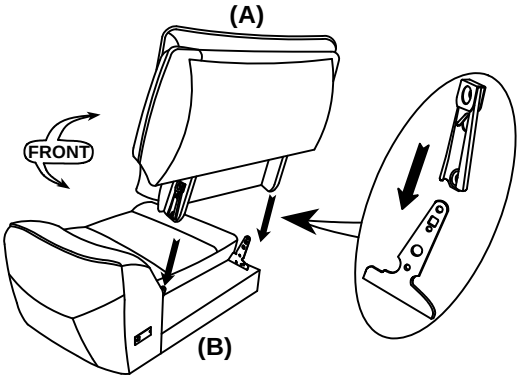


## STEP 2

COMPLETE

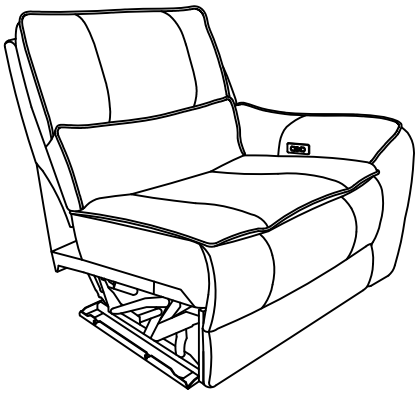

## STEP 3

**OPTION1:**

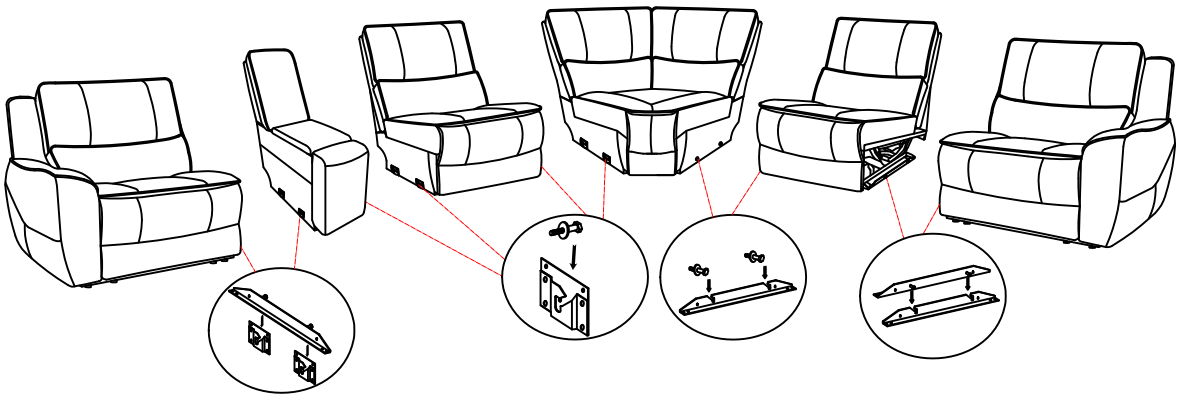

**OPTION2:**

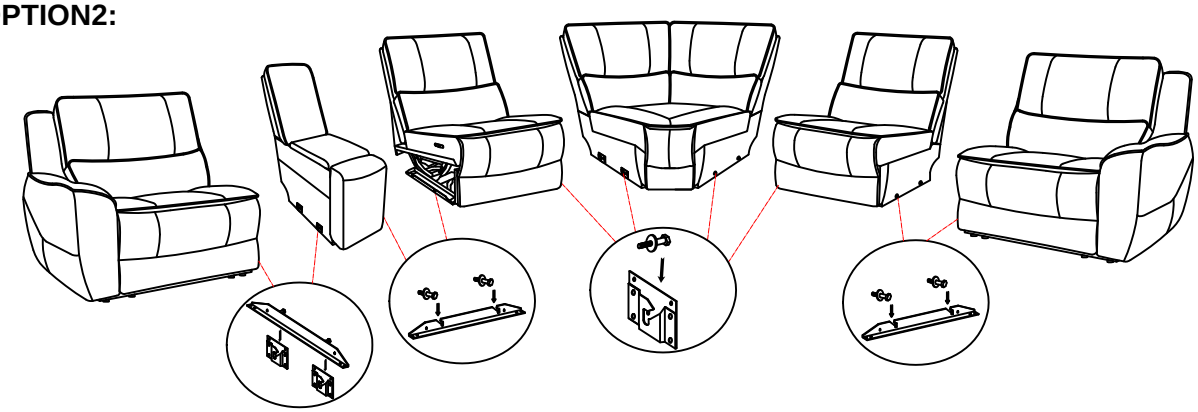

## STEP 4

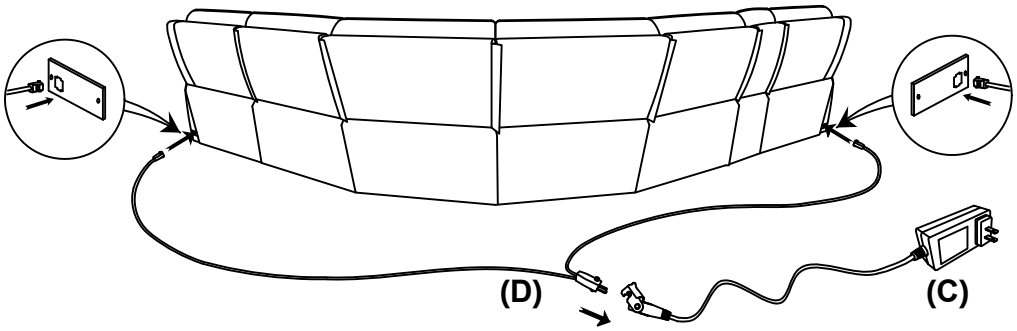


## STEP 5

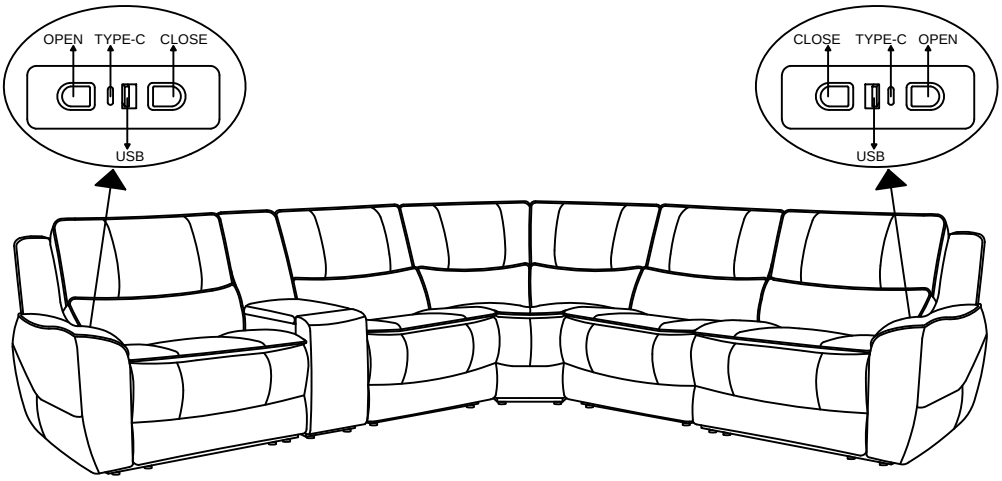

**ITEM :609690RRP**

Please follow below steps to install the 9V batteries when there is no power to operate the motion sofa.(Any model of 9V battery is applicable)

STEP 1

Open the marked battery door on the backup battery box.

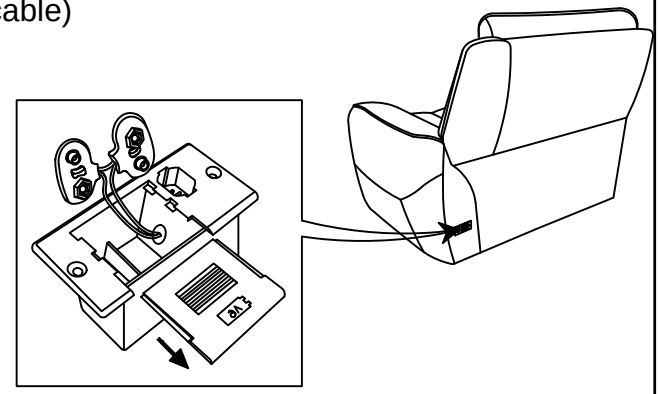

STEP 2

Install two 9V batteries in the backup battery box.(batteries are not included)

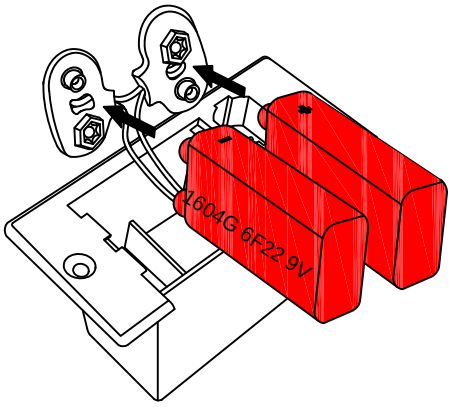


STEP 3

Push the batteries in.

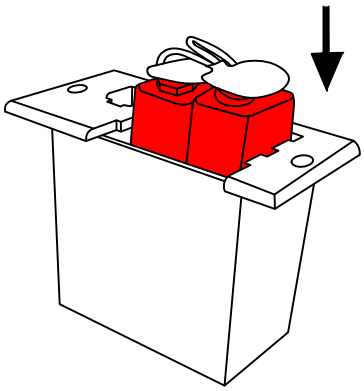

STEP 4

Close the box door.

Notice: Please don't keep the battery in the box when the power motion sofa is under daily use within power supply.

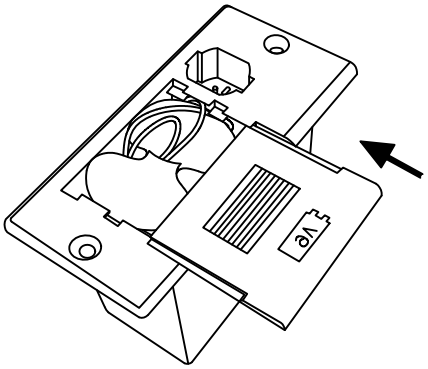

**ITEM :609690RRP**

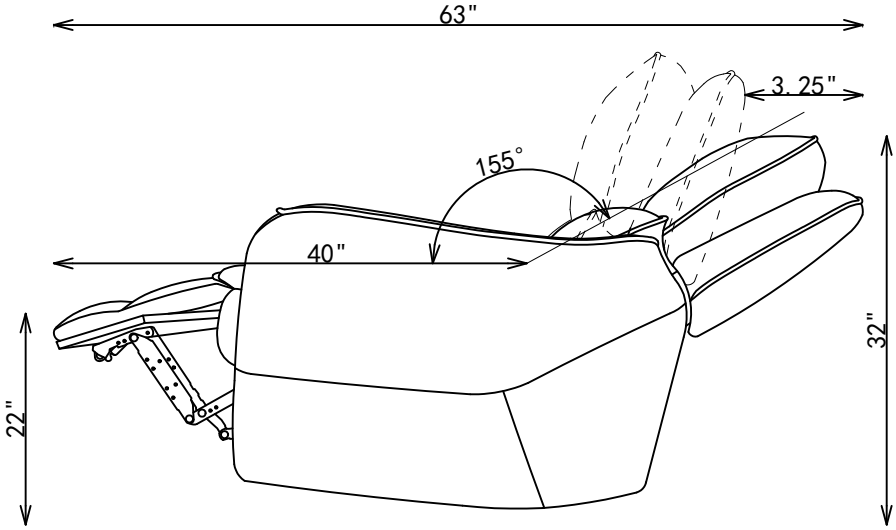


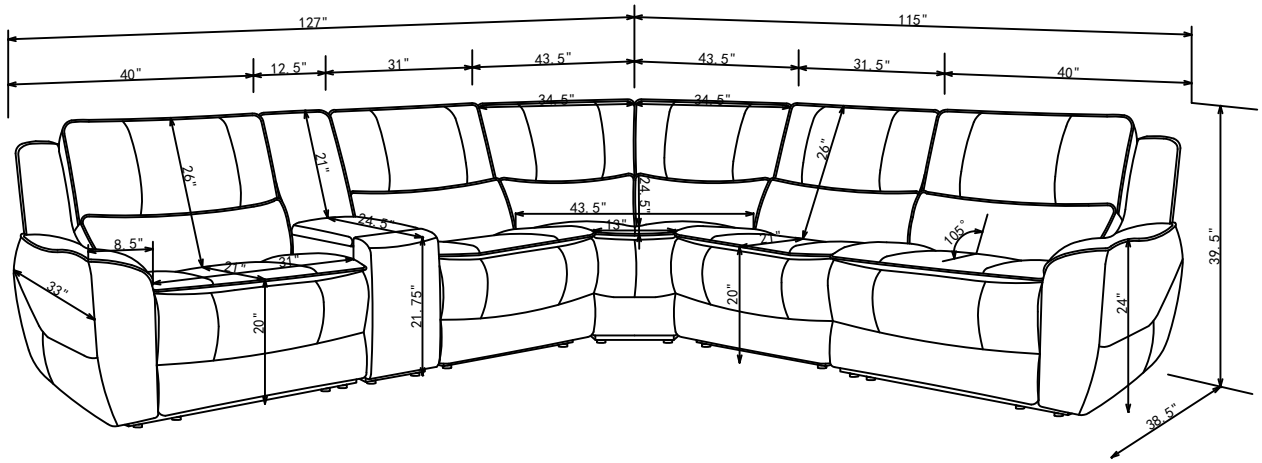


**Note: Dimension tolerance +5%**