COASTER®
FINE FURNITURE

ASSEMBLY INSTRUCTIONS
COASTER FINE FURNITURE

Fine Furniture for every stage of life

707746
MEDIA TOWER

REVISION 0 : 05/08/2023
REVISION 1 : 06/26/2024
REVISION 2 : 09/20/2024
REVISION 3 : 10/07/2026

COASTERFURNITURE.COM

ITEM:**707746**

ASSEMBLY INSTRUCTIONS

ASSEMBLY TIPS:

1. Remove hardware from box and sort by size.
2. Please check to see that all hardware and parts are present prior to start of assembly.
3. Please follow attached instructions in the same sequence as numbered to assure fast & easy assembly.

WARNING!

1. Don't attempt to repair or modify parts that are broken or defective. Please contact the store immediately.
2. This product is for home use only and not intended for commercial establishments.

ASSEMBLY TIME | 40 MINUTES

PARTS IDENTIFICATION

A	LEFT SIDE PANEL	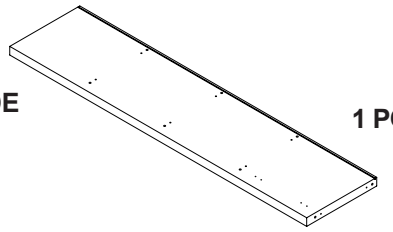	1 PC
B	RIGHT SIDE PANEL	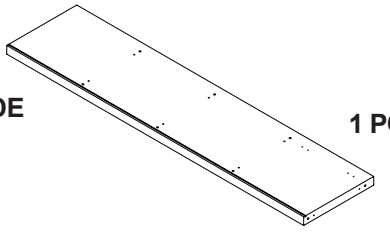	1 PC
C	BOTTOM PANEL	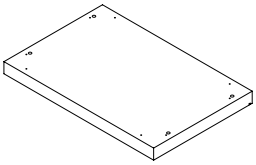	1 PC
D	LOWER CROSS PANEL	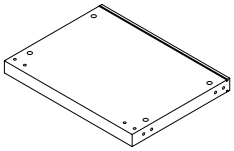	1 PC
E	UPPER CROSS PANEL	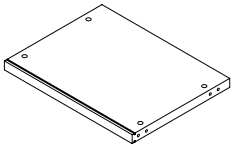	2 PCS
F	TOP PANEL	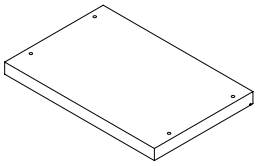	1 PC
G	UPPER BACK PANEL	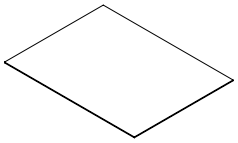	3 PCS
HN	LOWER BACK PANEL	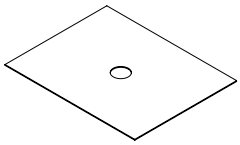	1 PC
I	DOOR	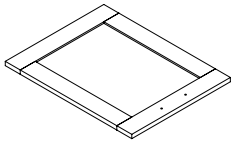	1 PC

NOTE:

Phillips head screw driver is required in the assembly process; however, manufacturer does not provide this item.

ITEM:**707746**

COASTER
FINE FURNITURE

HARDWARE IDENTIFICATION

Z

NO	DESCRIPTION	FIGURE	Q'TY	NO	DESCRIPTION	FIGURE	Q'TY
1	GLUE 15g		1 PC	10	HINGE SCREW Ø4x15mm SR		8 PCS
2	WOODEN DOWEL Ø8x30mm	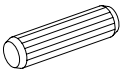	20 PCS	11	LEG 47mm BLK	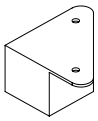	4 PCS
3	CAM BOLT Ø7x35.5mm SR	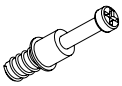	12 PCS	12	SCREW Ø4x19mm BLK	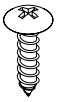	8 PCS
4	CAM LOCK Ø15x12mm SR		12 PCS	13	SQUARE FLOOR PROTECTOR 50x50mm	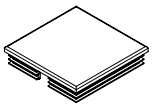	4 PCS
5	BOLT Ø9.5x55mm SR	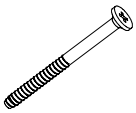	8 PCS	14	FIXER	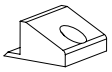	6 PCS
6	DOOR CATCH	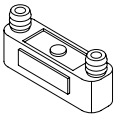	1 PC	15	FIXER SCREW Ø3x19mm SR		6 PCS
7	HANDLE L= 120mm BLK	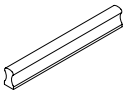	1 PC	16	STICKER Ø20mm	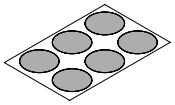	2 PCS
8	HANDLE BOLT Ø4x28mm BLK		2 PCS	17	PLASTIC COVER Ø 52mm		1 PC
9	HINGE Ø35mm SR	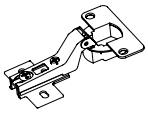	2 PCS				

Z7,Z8,Z9,Z11 not included in blister packaging.

NOTE:
Phillips head screw driver is required in the assembly process; however, manufacturer does not provide this item.

ITEM:**707746**

STEP 1

COASTER
FINE FURNITURE

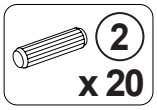

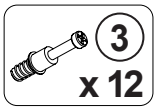

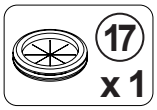

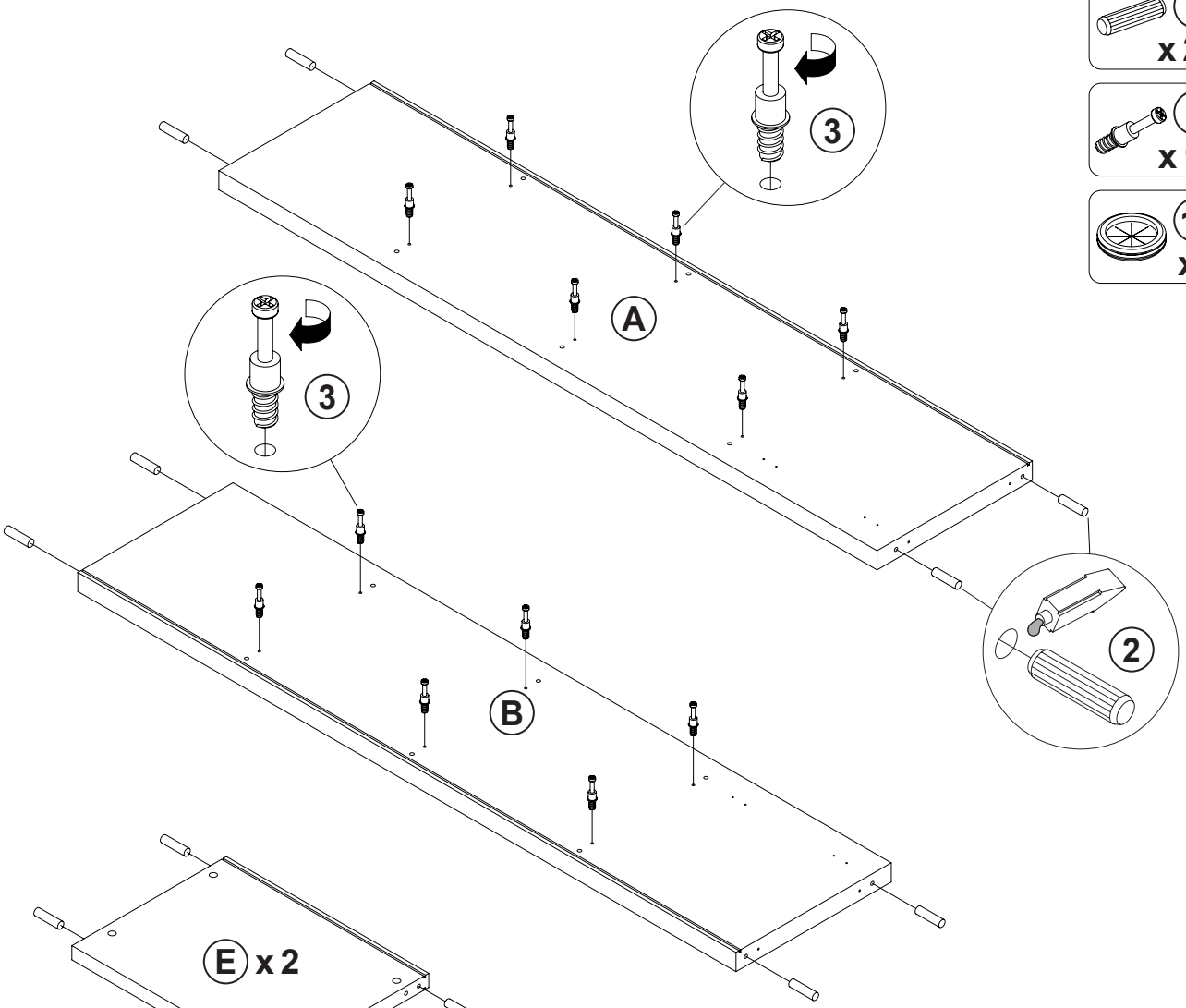

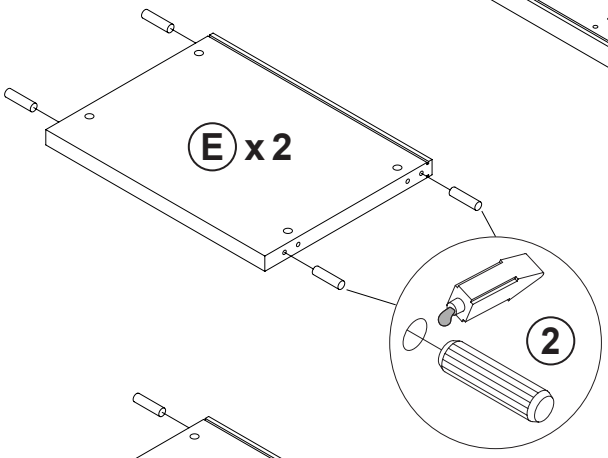

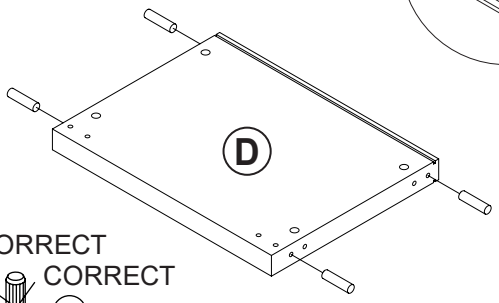

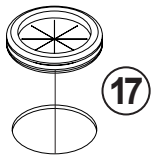

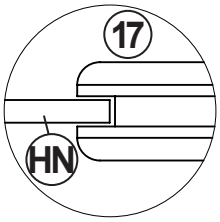

Section

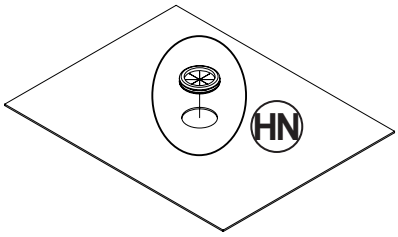

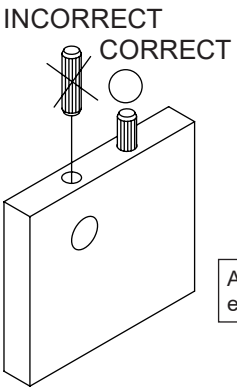

Apply glue on all wooden dowels to ensure integrity of the structure.

ITEM:**707746**

COASTER FINE FURNITURE

STEP 2

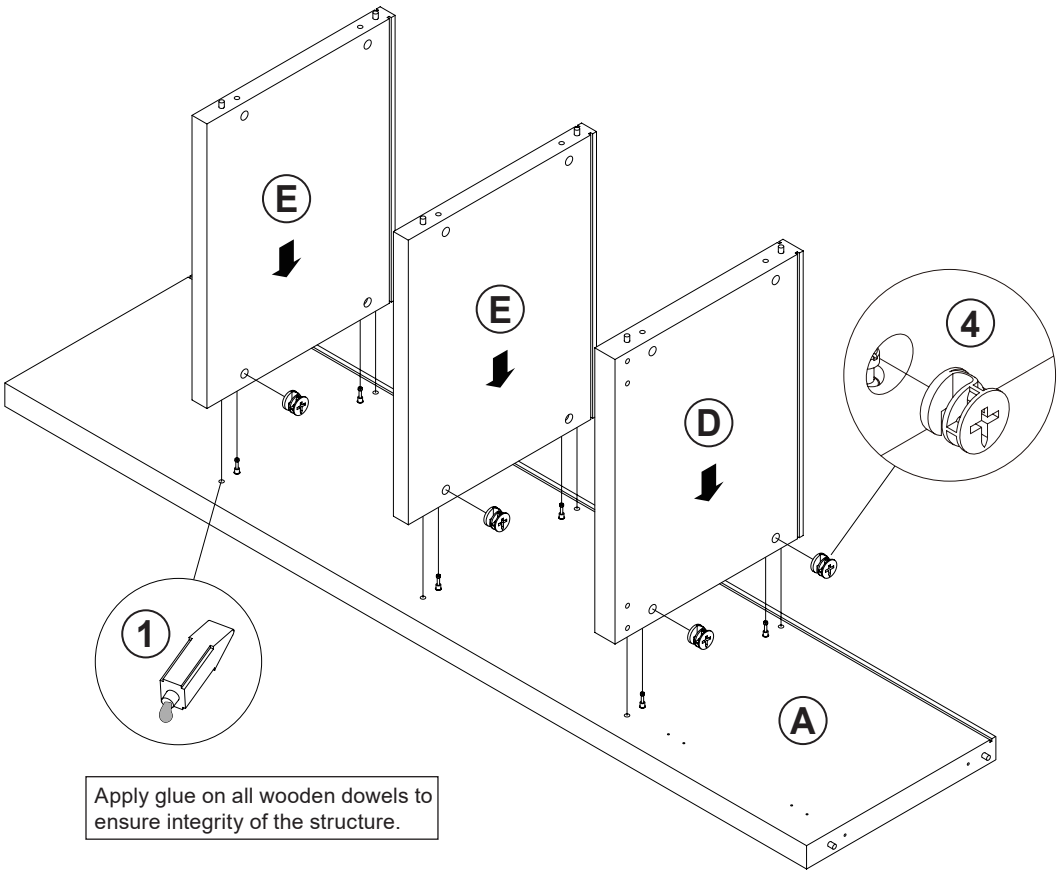

Apply glue on all wooden dowels to ensure integrity of the structure.

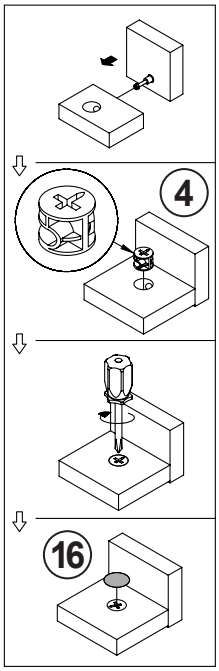

STEP 3

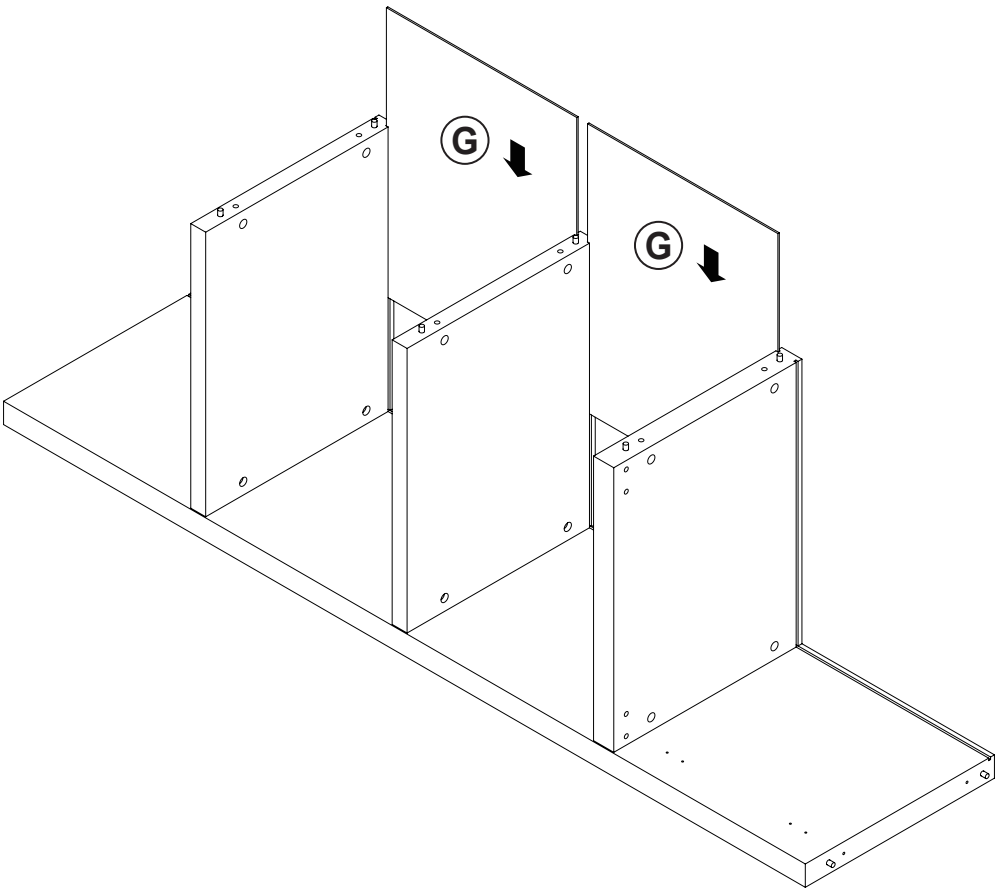

ITEM:**707746**

COASTER
FINE FURNITURE

STEP 4

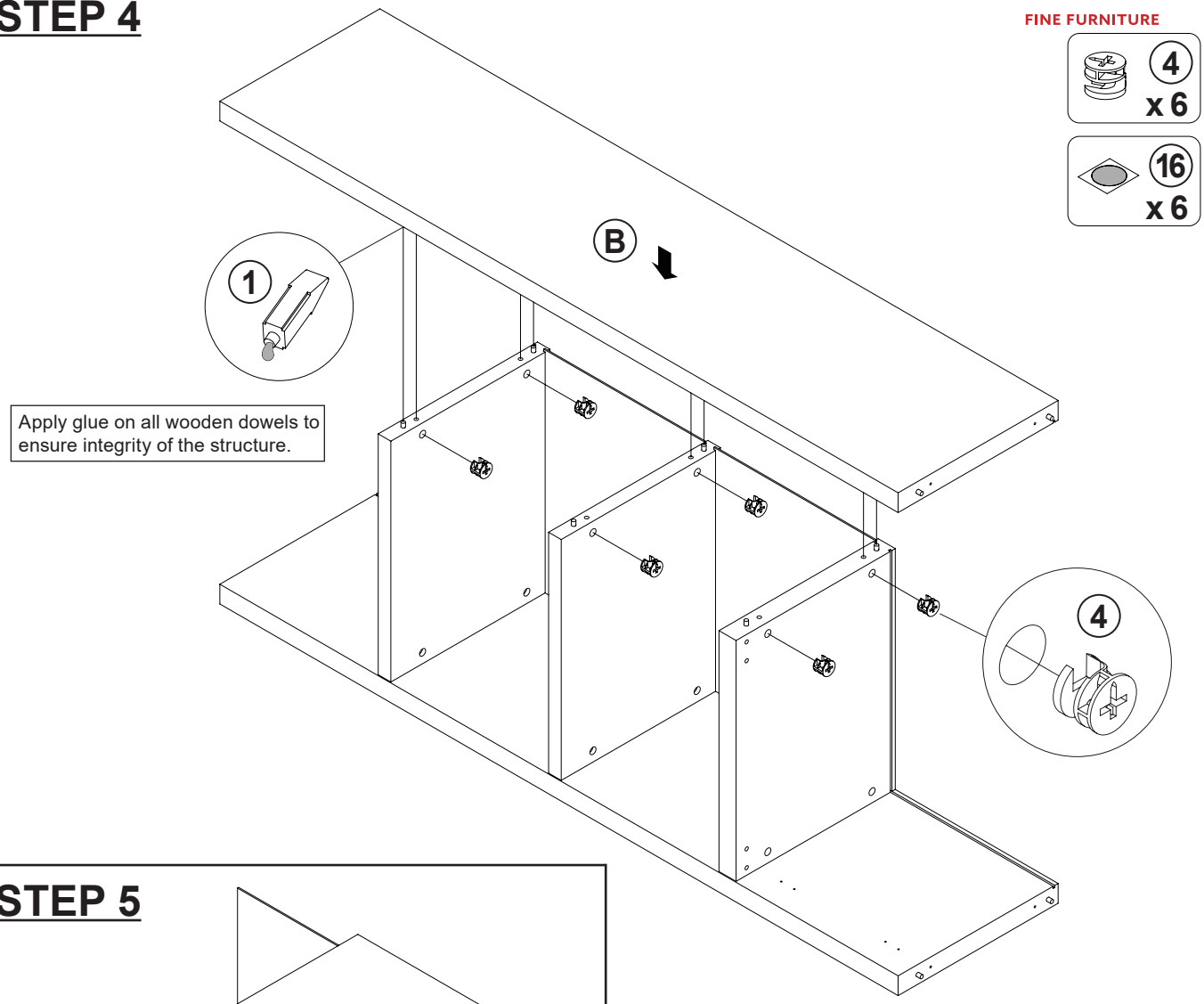

Apply glue on all wooden dowels to ensure integrity of the structure.

STEP 5

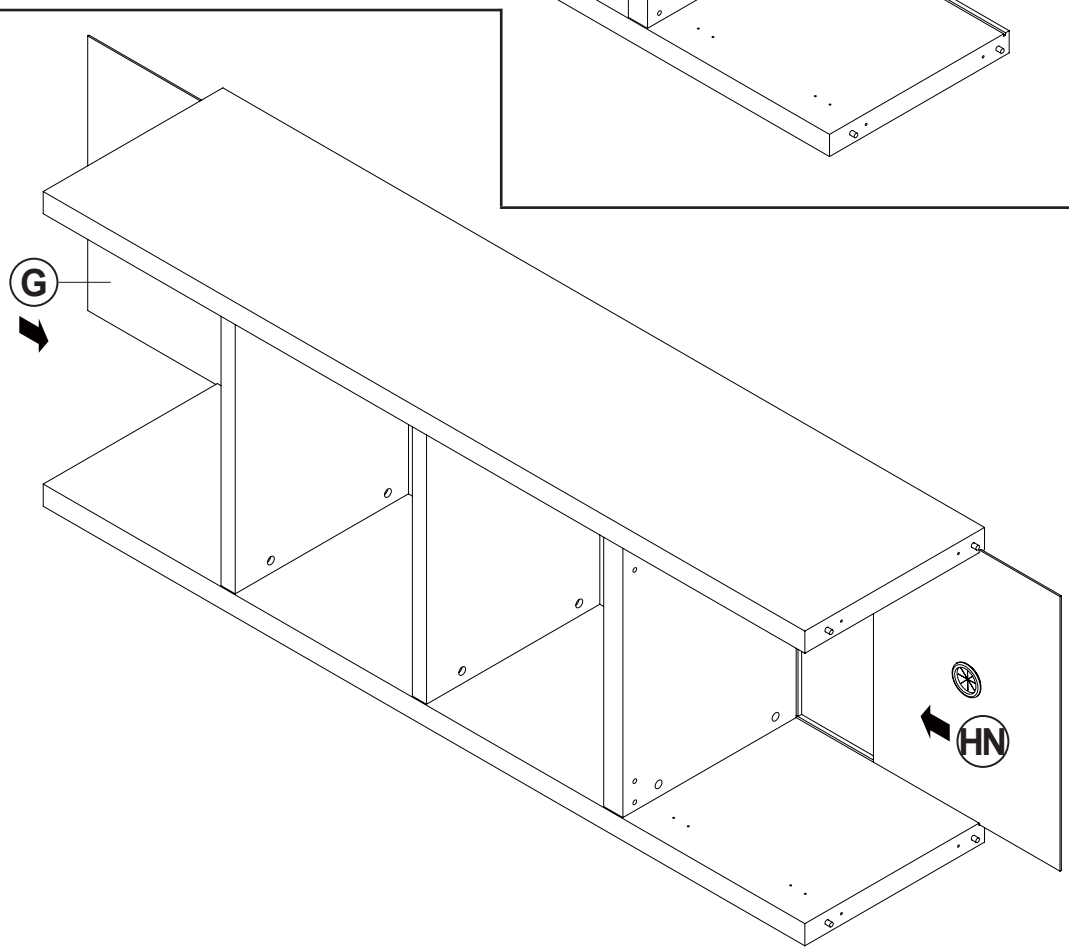

ITEM:**707746**

COASTER
FINE FURNITURE

STEP 6

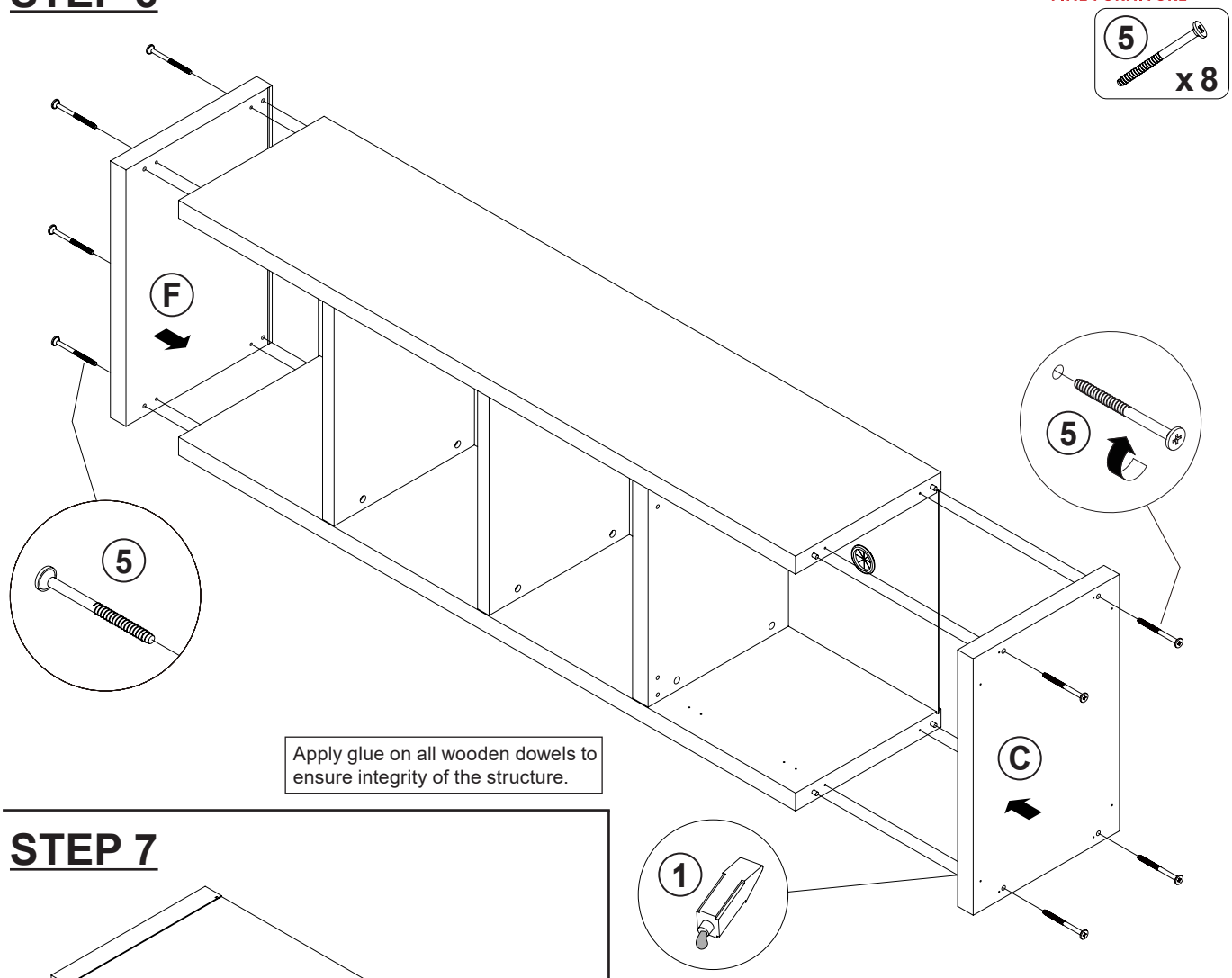

Apply glue on all wooden dowels to ensure integrity of the structure.

STEP 7

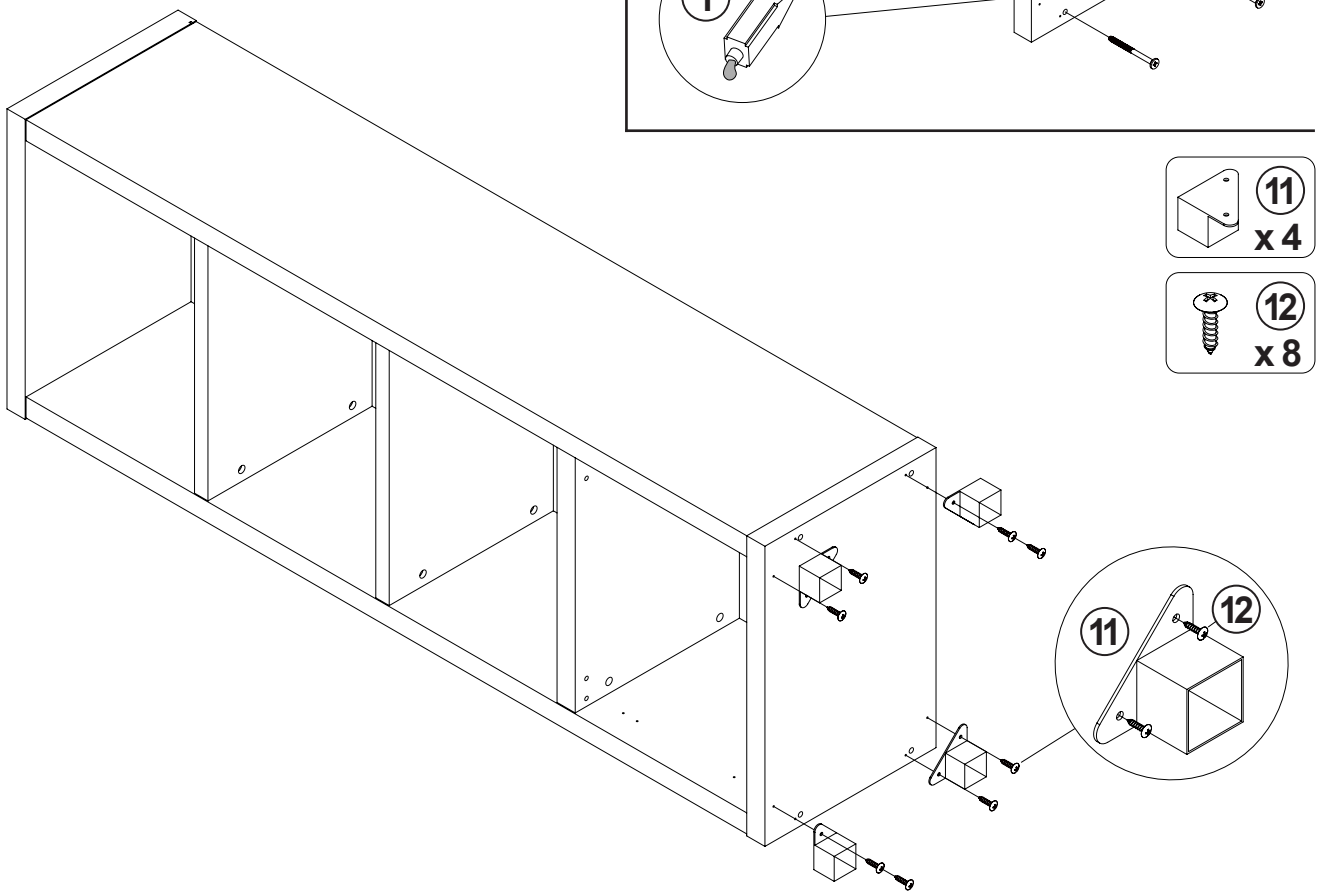

ITEM:**707746**

COASTER
FINE FURNITURE

STEP 8

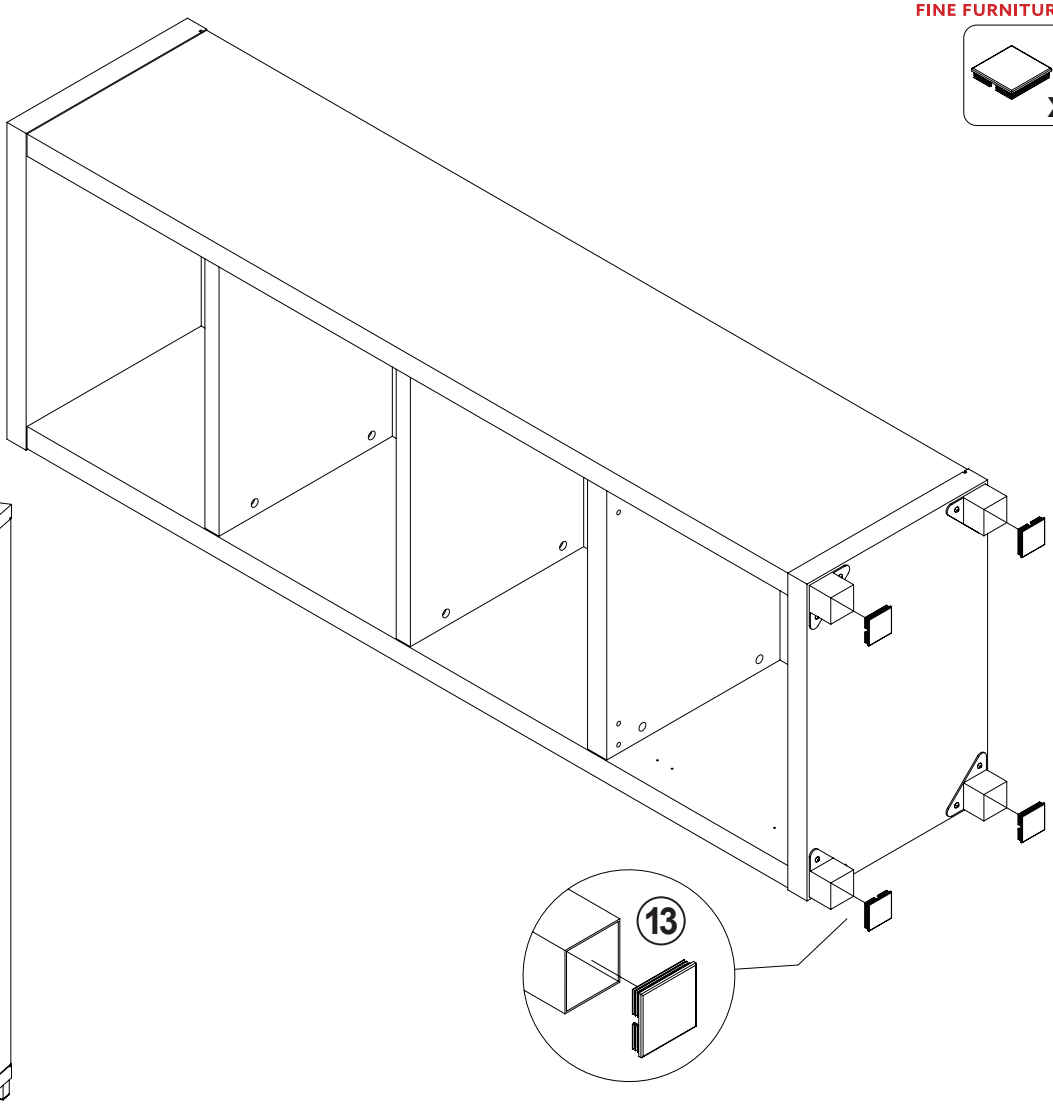

STEP 9

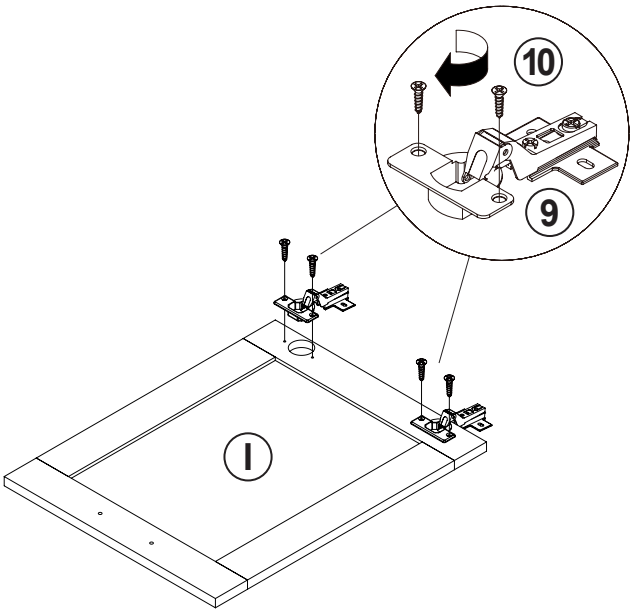

ITEM:**707746**

STEP 10

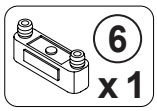

LEFT

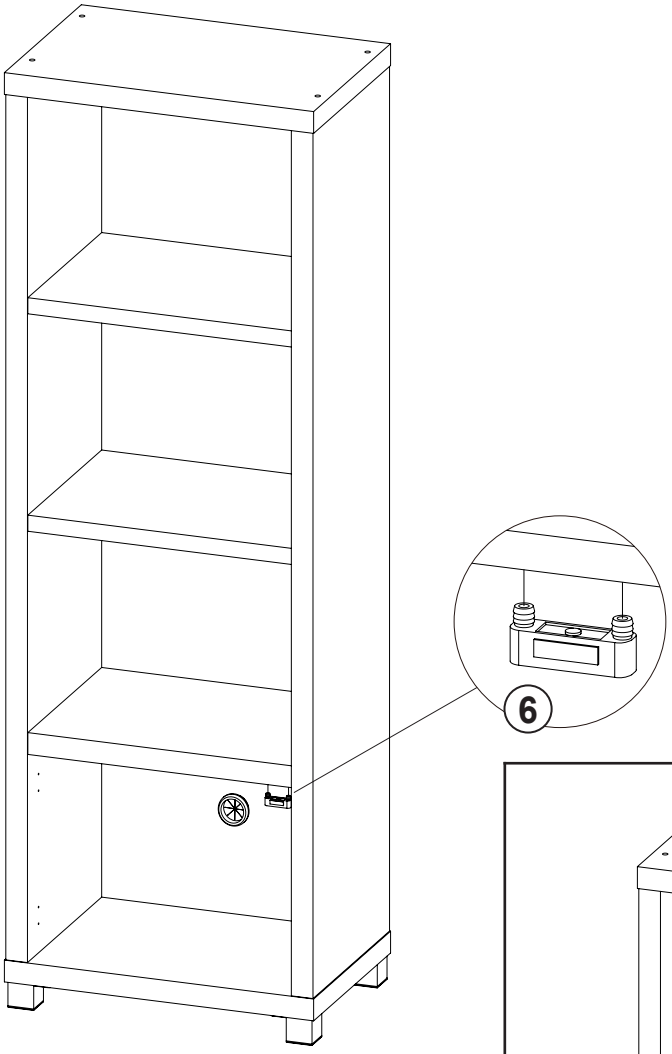

RIGHT

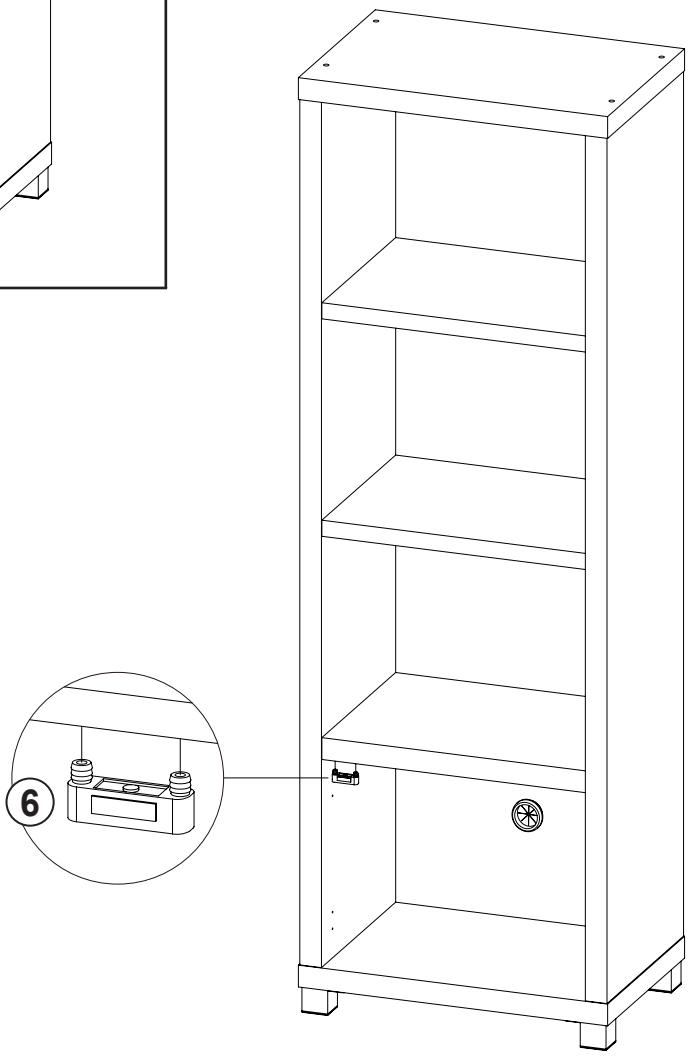

ITEM:**707746**

STEP 11

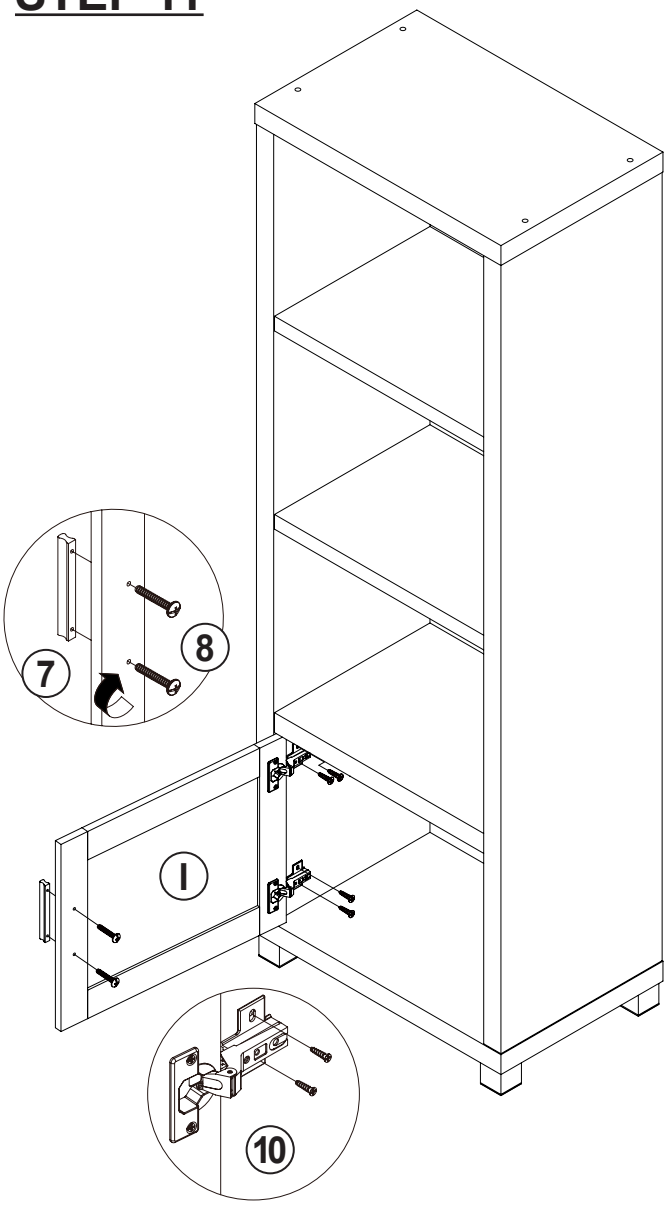

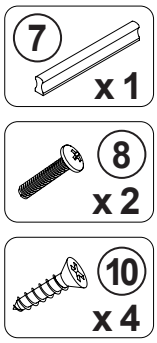

RIGHT

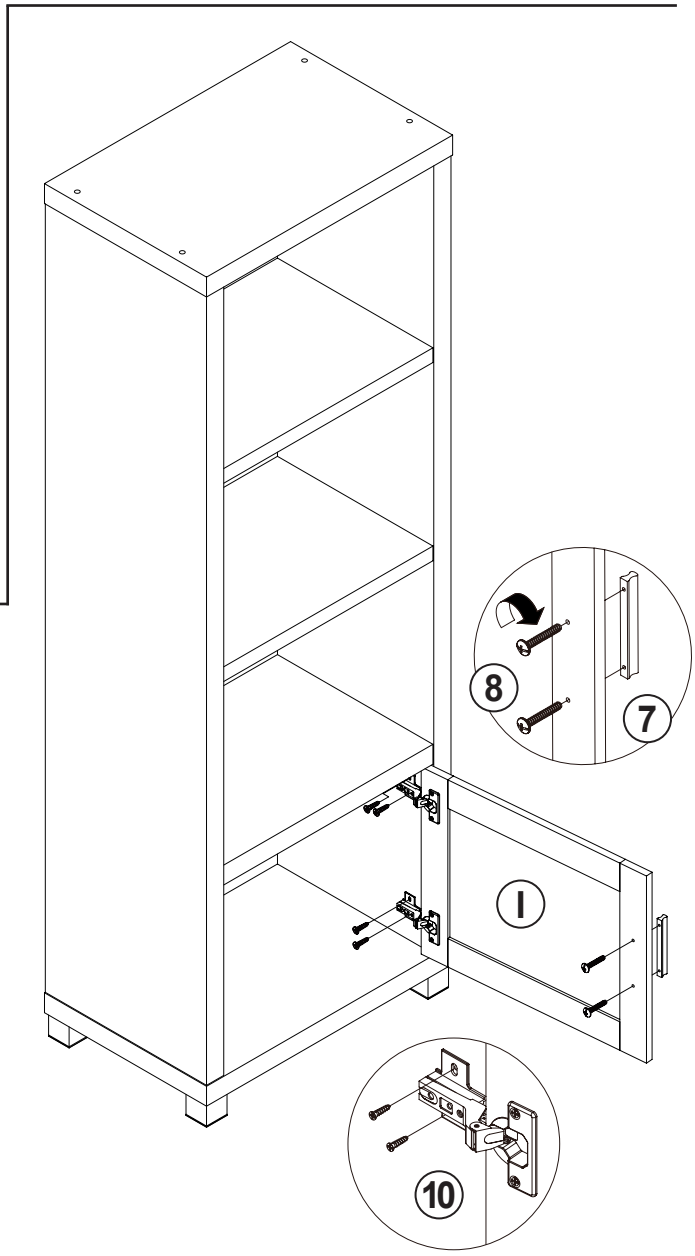

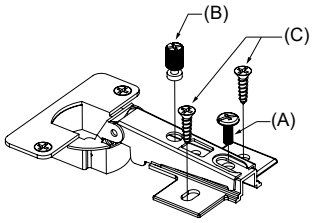

HORIZONTAL BY
SCREW A ADJUSTMENT

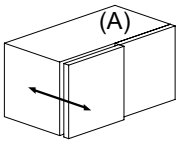

LATERAL BY
SCREW B ADJUSTMENT

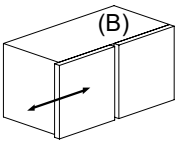

VERTICAL BY
SCREW C ADJUSTMENT

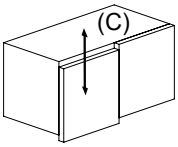

ITEM:**707746**

COASTER
FINE FURNITURE

STEP 12

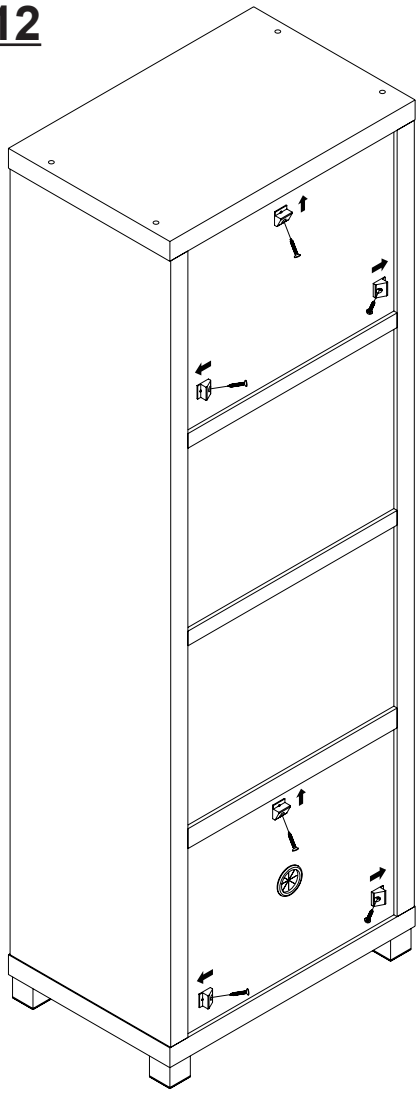

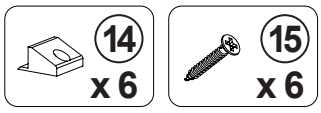

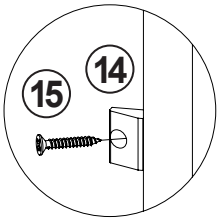

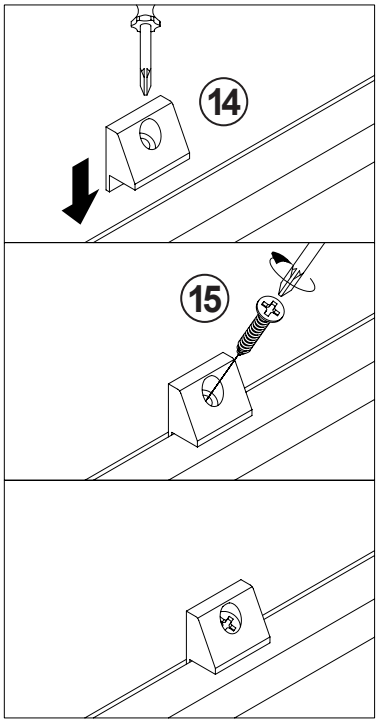

STEP 13

COMPLETE

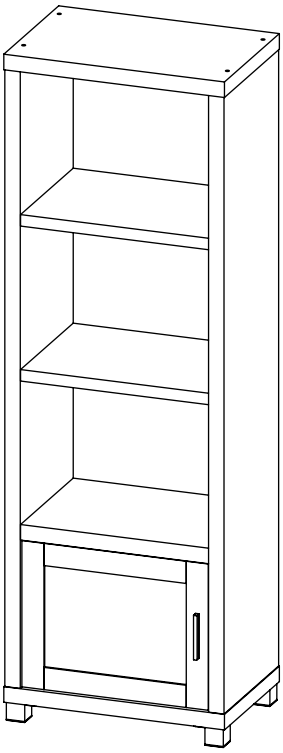

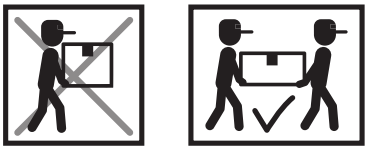

ITEM:**707746**

COASTER
FINE FURNITURE

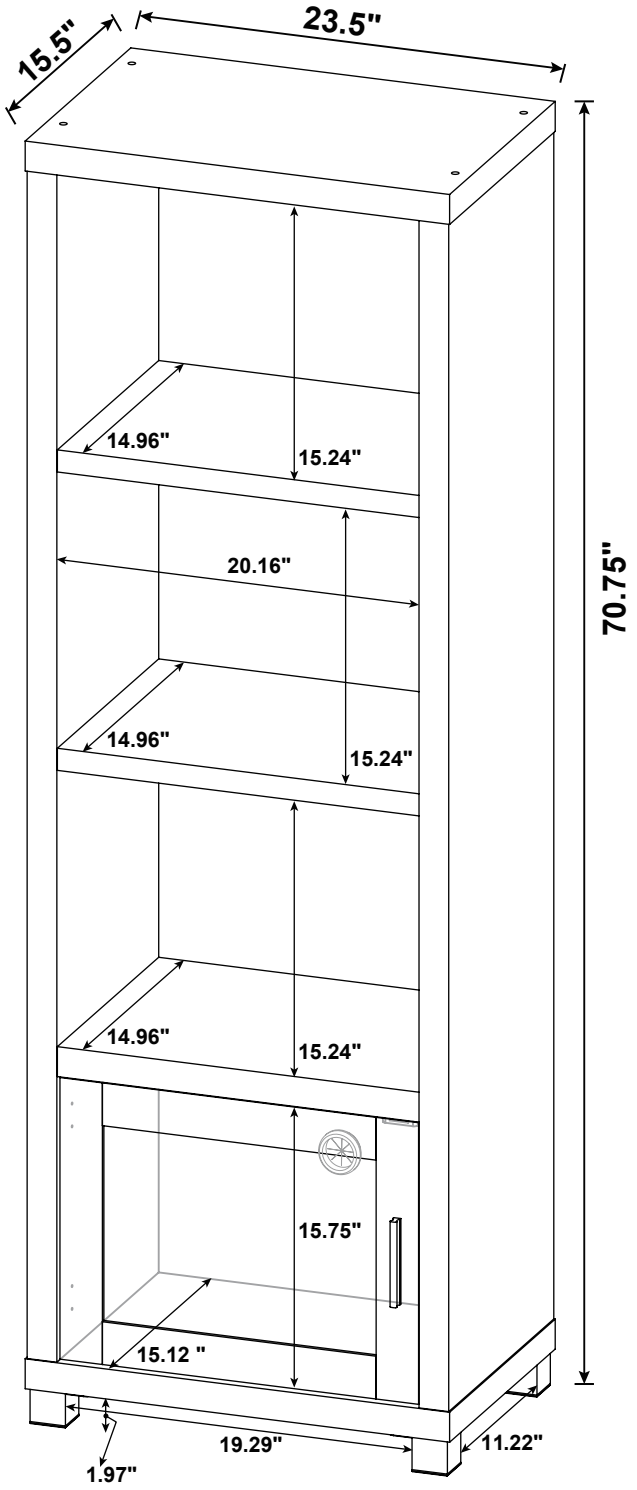

Note : Dimension tolerance ±5%

ITEM:**707746**

COASTER
FINE FURNITURE

ANTI-TIPPING INSTALLMENT INSTRUCTIONS

FURNITURE TIPPING RESTRAINT

WARNING

Injury may result from tipping furniture.
This restraint may protect against tipping furniture.
Do not allow children to climb on furniture.
This restraint is not a substitute for proper adult supervision.
Failure to detach this restraint before moving the furniture may result in injury and damage.

This restraint must be screwed to a wood stud on the wall, using the long screw provided.

STEP 1

Secure the bracket to the back top of the unit, using the short screw provided, as shown in the drawing.

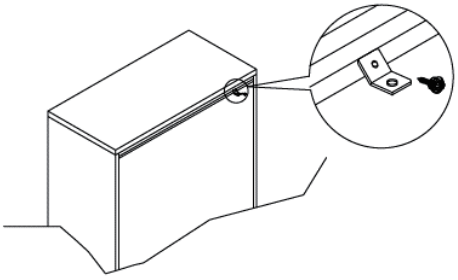

STEP 2

Locate the wood stud on the wall, and secure the other bracket, 2 inches below the back of the unit.

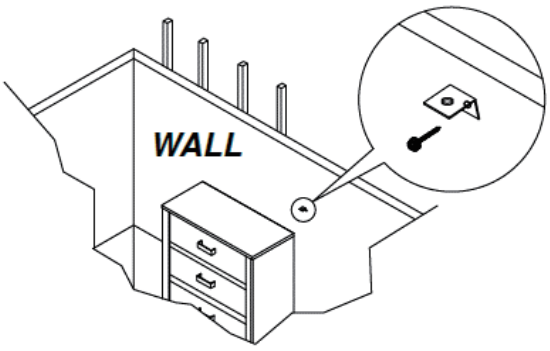

STEP 3
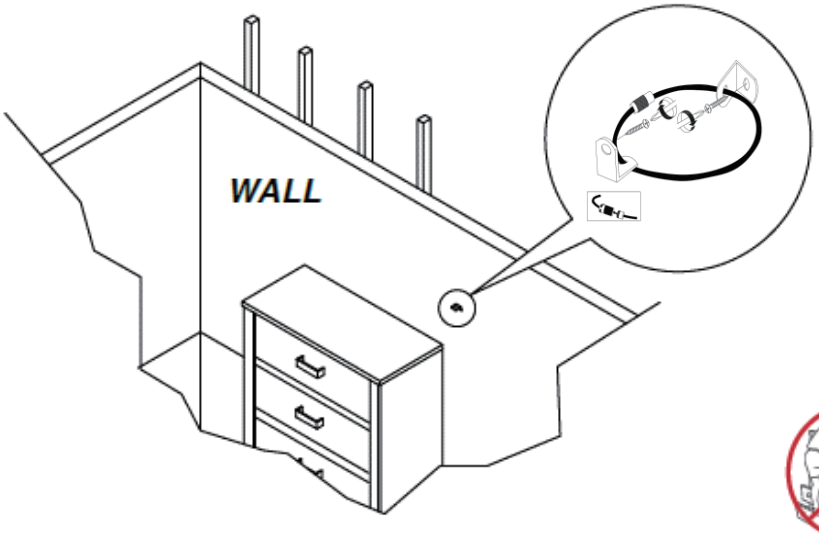
Place the furniture into position so both mounting brackets are vertically in line. Lace the end of the restraint strap through the larger hole in each mounting bracket. Bring both ends together and slide the flat end through the locking end, and drag it through, until the slack is removed. Ensure that the strap is securely laced and locked.