COASTER®
FINE FURNITURE

ASSEMBLY INSTRUCTIONS
COASTER FINE FURNITURE

Fine Furniture for every stage of life

801543
BOOKCASE

REVISION 0 : 04/21/2018
REVISION 1 : 07/02/2019
REVISION 2 : 06/28/2022
REVISION 3 : 08/14/2024
REVISION 4 : 10/06/2026

ITEM:**801543**

COASTER
FINE FURNITURE

ASSEMBLY INSTRUCTIONS

ASSEMBLY TIPS:

1. Remove hardware from box and sort by size.
2. Please check to see that all hardware and parts are present prior to start of assembly.
3. Please follow attached instructions in the same sequence as numbered to assure fast & easy assembly.

WARNING!

1. Don't attempt to repair or modify parts that are broken or defective. Please contact the store immediately.
2. This product is for home use only and not intended for commercial establishments.

ASSEMBLY TIME | 40 MINUTES

PARTS IDENTIFICATION

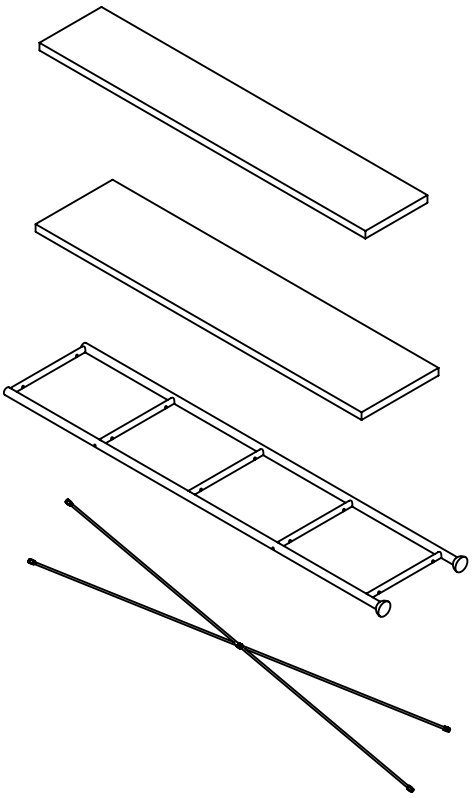

A	SHELF	4 PCS
B	TOP PANEL	1 PC
C	METAL FRAME	3 PCS
D	SUPPORT BAR	1 PC

HARDWARE IDENTIFICATION

Z

NO	DESCRIPTION	FIGURE	Q'TY
1	LARGE BOLT M6x44mm BLK		30 PCS
2	SHORT BOLT M6x15mm BLK		4 PCS
3	ALLEN WRENCH 4mm SR		1 PC

NOTE:

Furniture assembly: use the included Allen wrench; no Phillips screwdriver is required.
Phillips screwdriver is not included; see separate anti-tip installation instructions on page 6.

ITEM:**801543**

COASTER
FINE FURNITURE

STEP 1

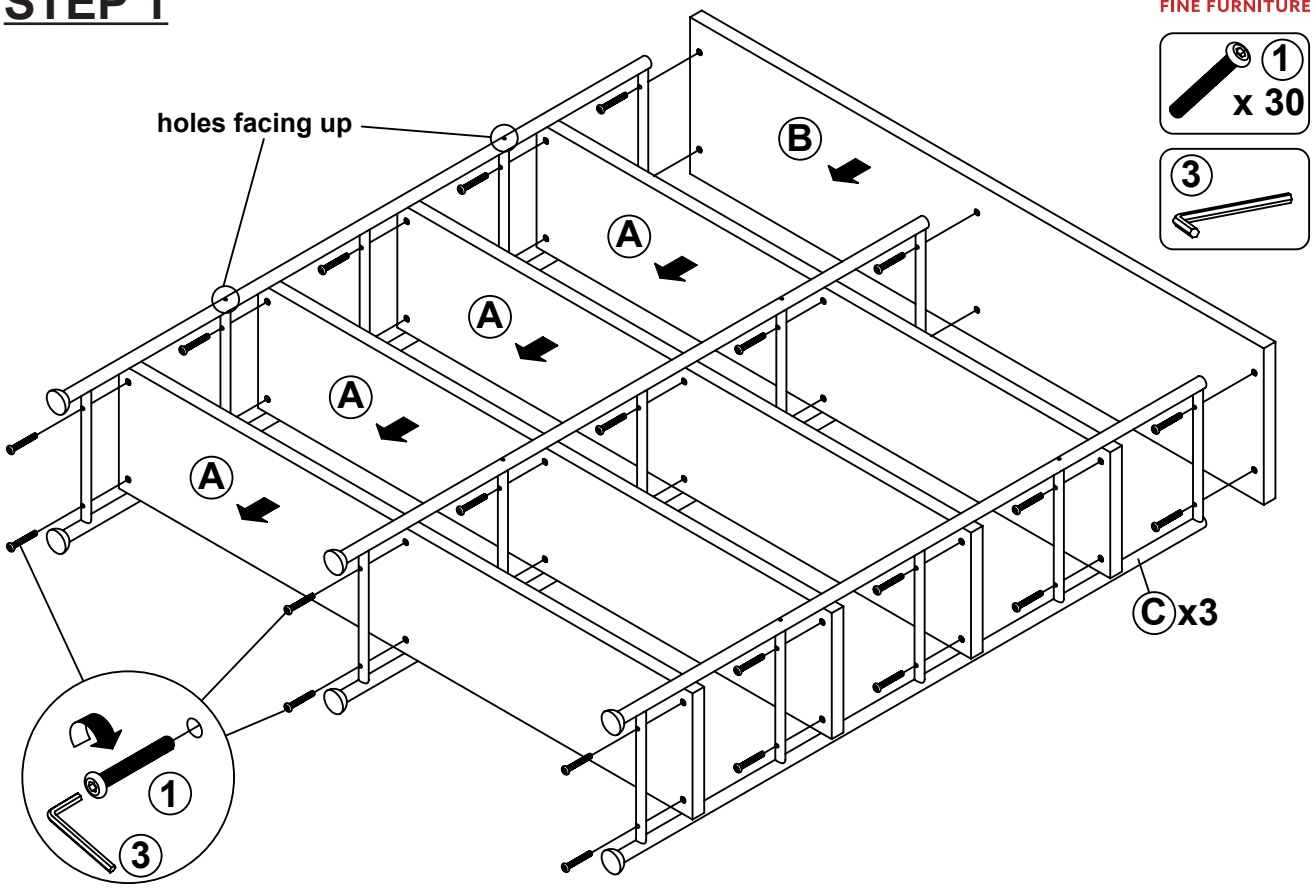

STEP 2

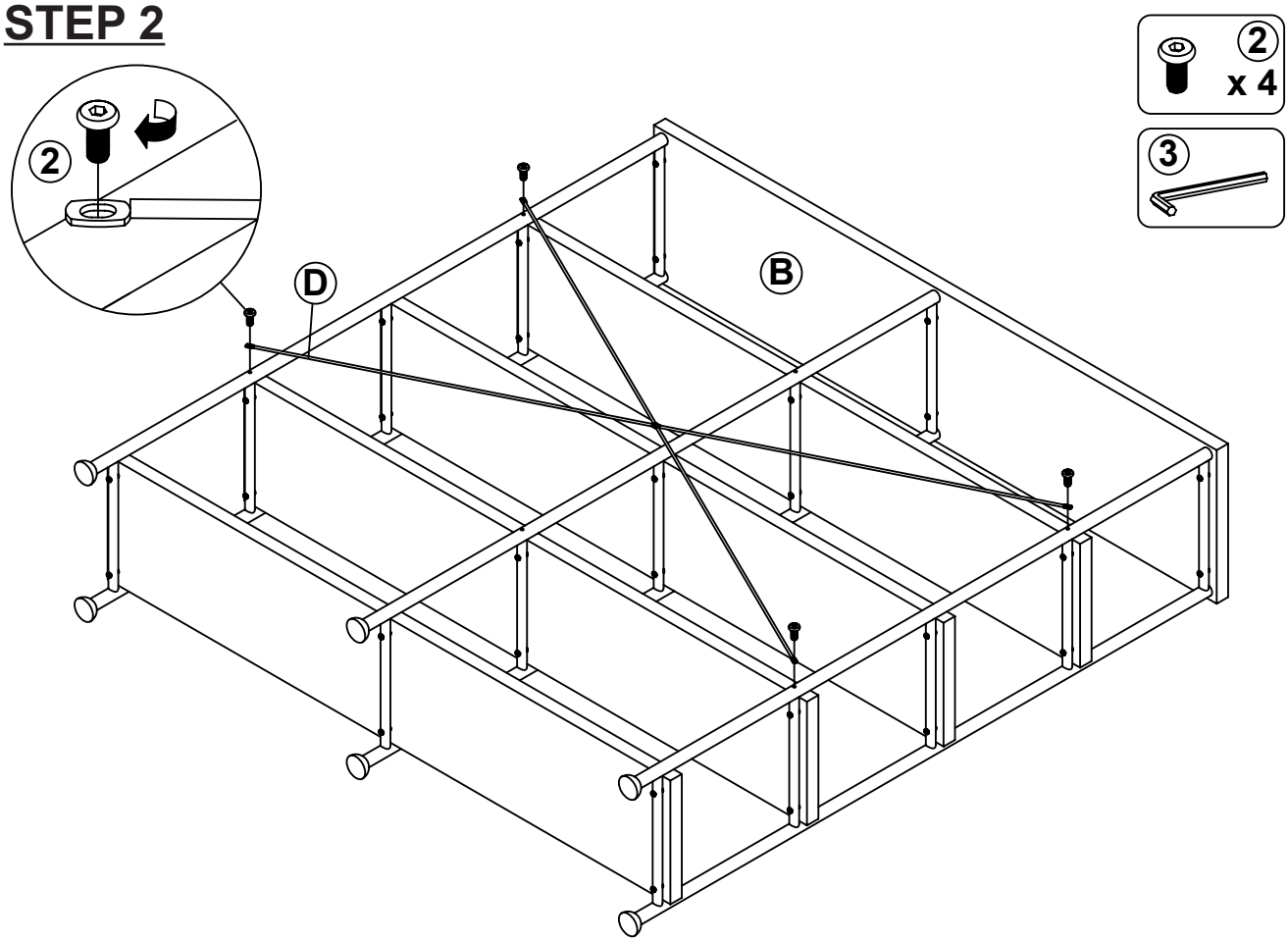

ITEM:**801543**

STEP 3

COMPLETE

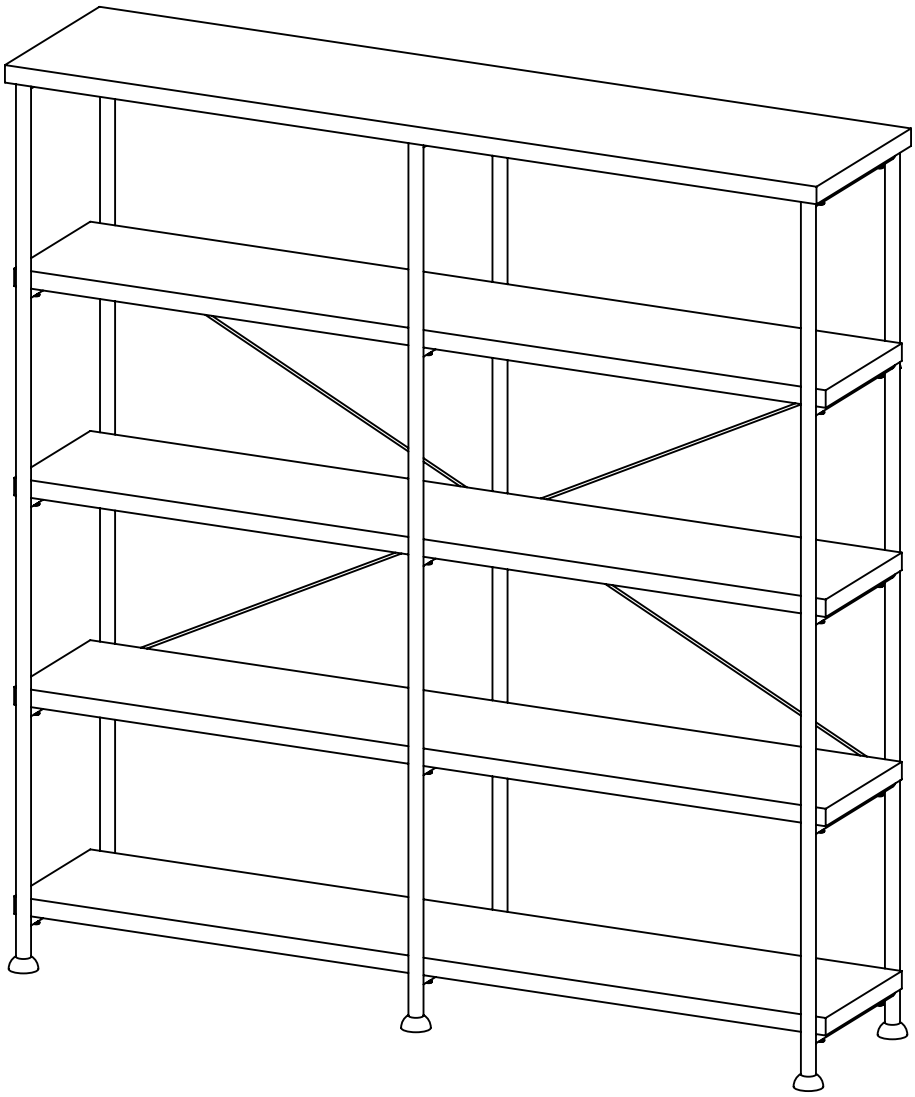

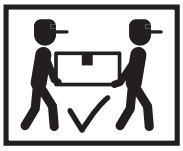

ITEM:**801543**

COASTER
FINE FURNITURE

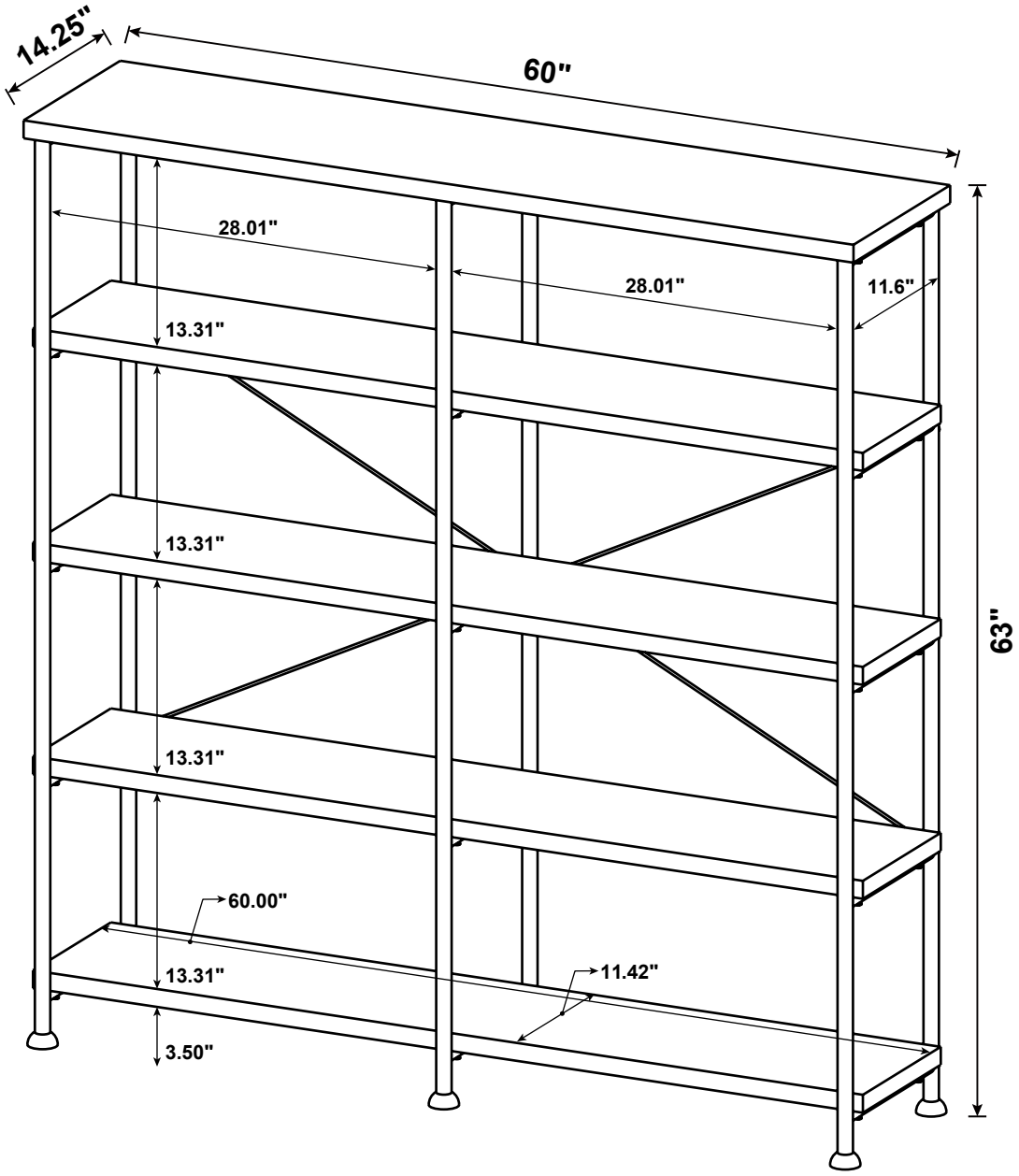

Note : Dimension tolerance ±5%

ITEM:**801543**

COASTER

ANTI-TIPPING INSTALLMENT INSTRUCTIONS

FURNITURE TIPPING RESTRAINT

WARNING

Injury may result from tipping furniture.
This restraint may protect against tipping furniture.
Do not allow children to climb on furniture.
This restraint is not a substitute for proper adult supervision.
Failure to detach this restraint before moving the furniture may result in injury and damage.

This restraint must be screwed to a wood stud on the wall, using the long screw provided.

STEP 1

Secure the bracket to the back top of the unit, using the short screw provided, as shown in the drawing.

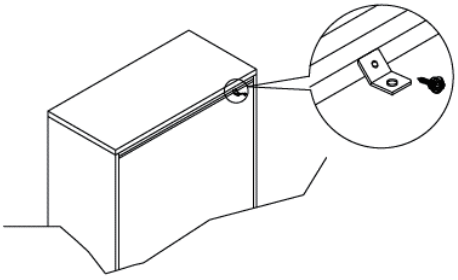

STEP 2

Locate the wood stud on the wall, and secure the other bracket, 2 inches below the back of the unit.

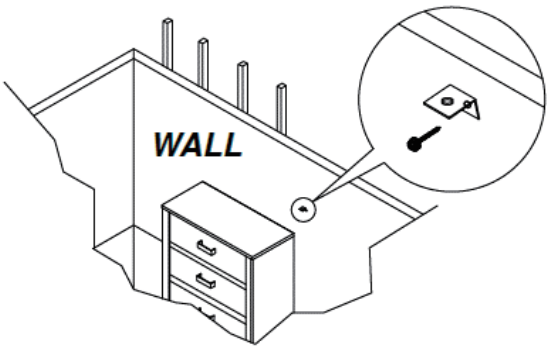

STEP 3
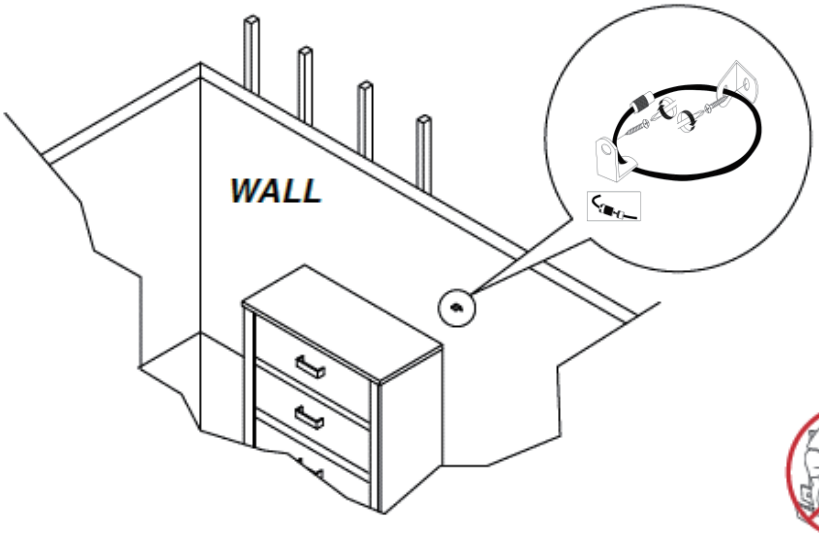
Place the furniture into position so both mounting brackets are vertically in line. Lace the end of the restraint strap through the larger hole in each mounting bracket. Bring both ends together and slide the flat end through the locking end, and drag it through, until the slack is removed. Ensure that the strap is securely laced and locked.