ASSEMBLY INSTRUCTIONS
COASTER FINE FURNITURE

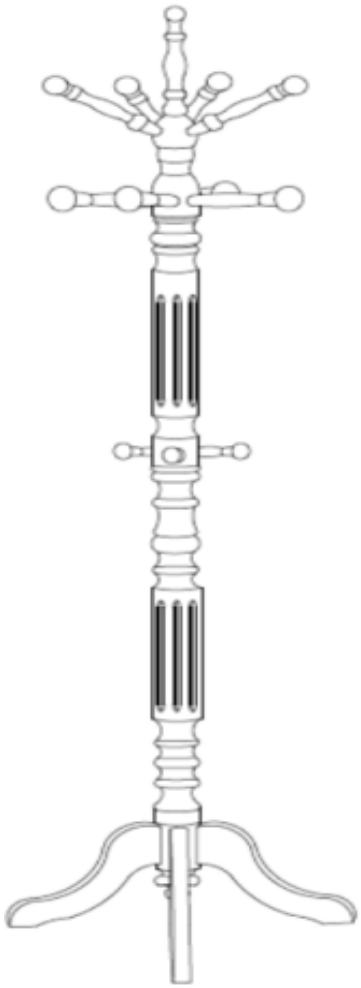

Fine Furniture for every stage of life

900769
Coat Rack

REVISION 0 : 07/10/2006
REVISION 1 : 02/20/2012
REVISION 2 : 02/22/2018
REVISION 3 : 05/31/2018
REVISION 4 : 12/12/2018
REVISION 5 : 05/27/2019

ITEM:**900769**

ASSEMBLY INSTRUCTIONS

ASSEMBLY TIPS:

1. Remove hardware from box and sort by size.
2. Please check to see that all hardware and parts are present prior to start of assembly.
3. Please follow attached instructions in the same sequence as numbered to assure fast & easy assembly.

WARNING!

1. Don't attempt to repair or modify parts that are broken or defective. Please contact the store immediately.
2. This product is for home use only and not intended for commercial establishments.

ASSEMBLY TIME	15 MINUTES

PARTS IDENTIFICATION

1	LEG		3PCS
2	MOUNTING BRACKET	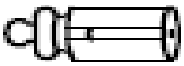	1PC
3	BOTTOM COLUMN		1PC
4	MIDDLE COLUMN		1PC
5	TOP COLUMN		1PC
6	FINIAL		1PC
7	SHORT SPINDLE		3PCS
8	MEDIUM SPINDLE		4PCS
9	LONG SPIDLE		4PCS

ITEM:**900769**

ASSEMBLY INSTRUCTIONS

STEP 1

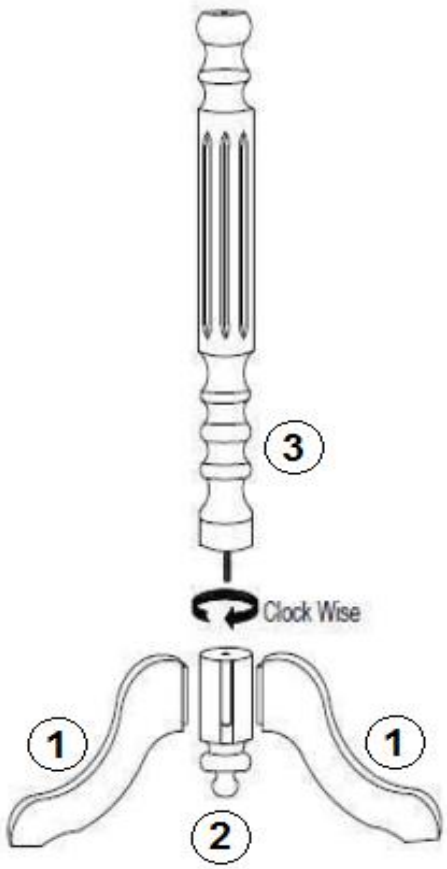

STEP 2

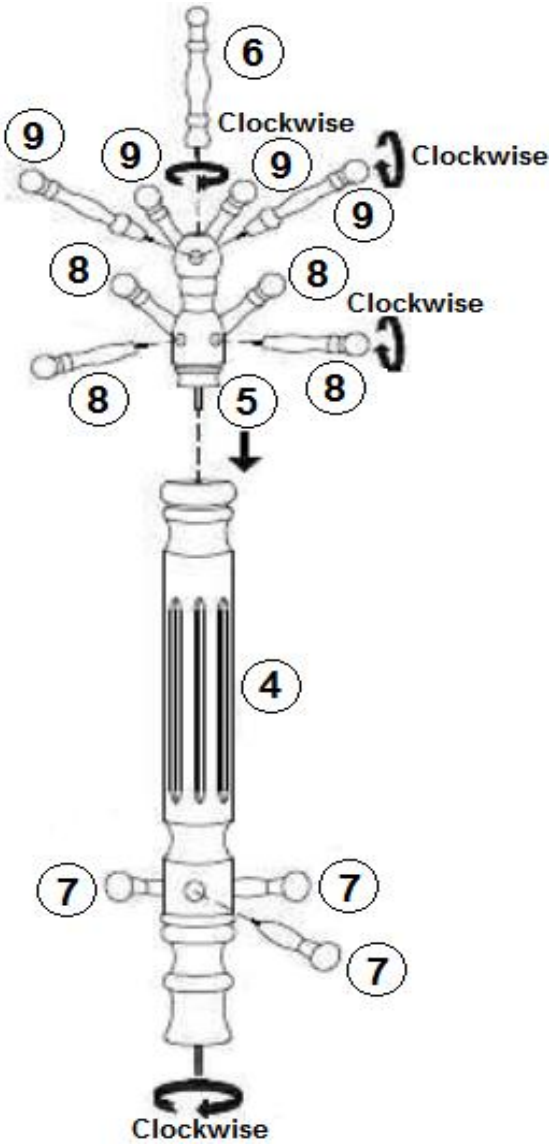

ITEM:**900769**

COASTER
FINE FURNITURE

ASSEMBLY INSTRUCTIONS

STEP 3
COMPLETE

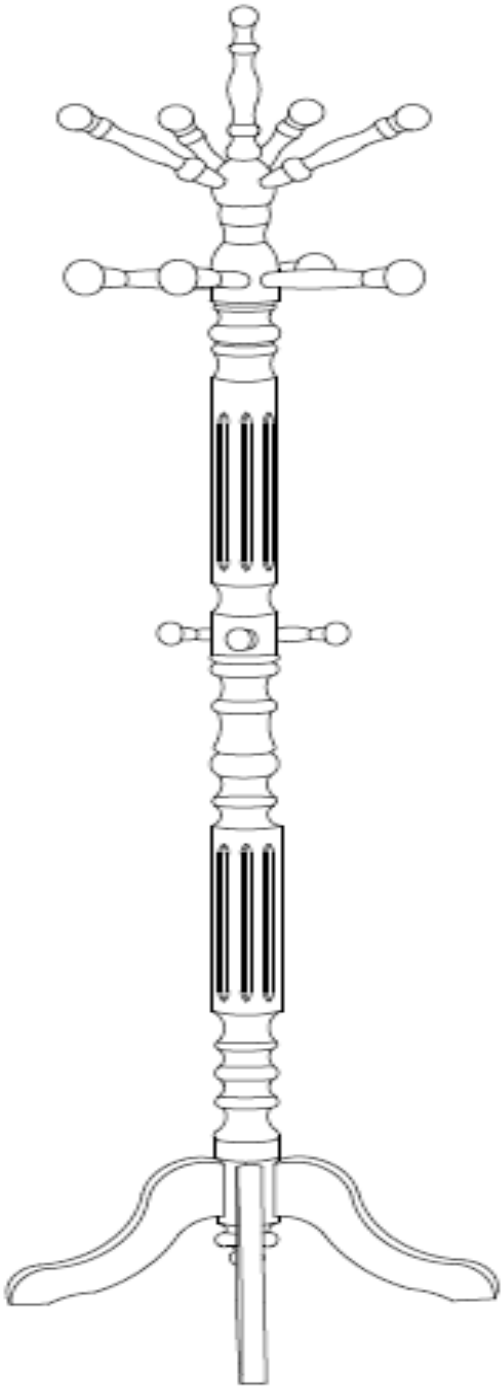

ITEM:**900769**

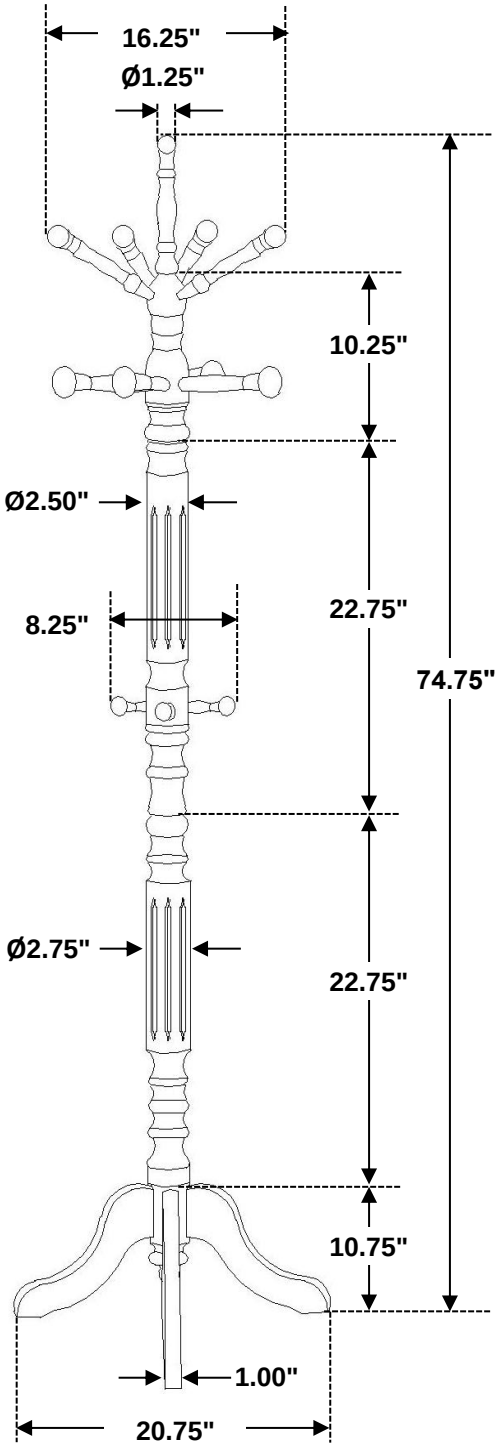

Note : Dimension tolerance ±5%