ASSEMBLY INSTRUCTIONS
COASTER FINE FURNITURE

Fine Furniture for every stage of life

215914
Mirror

ITEM: **215914**

ASSEMBLY INSTRUCTIONS

ASSEMBLY TIPS:

1. Remove hardware from box and sort by size.
2. Please check to see that all hardware and parts are present prior to start of assembly.
3. Please follow attached instructions in the same sequence as numbered to assure fast & easy assembly.

WARNING!

1. Don't attempt to repair or modify parts that are broken or defective. Please contact the store immediately.
2. This product is for home use only and not intended for commercial establishments.

ASSEMBLY TIME	10 MINUTES

PARTS IDENTIFICATION

A	MIRROR	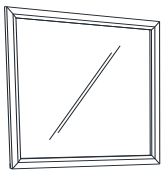	1PC
B	DRESSER FROM BOX ITEM #215913	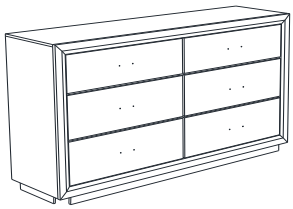	1PC
C	MIRROR SUPPORT (PACK WITH MIRROR)	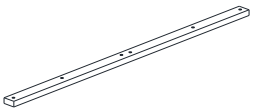	2PCS

HARDWARE IDENTIFICATION

1	FLAT HEAD SCREW (M4 x 32mm - RBW)		12PCS

NOTE:

Phillips head screw driver is required in the assembly process; however, manufacturer does not provide this item.

ITEM: **215914**

ASSEMBLY INSTRUCTIONS

COASTER FINE FURNITURE

STEP 1

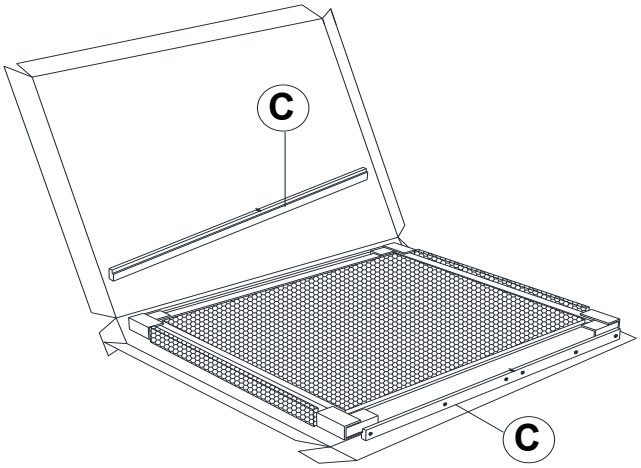

STEP 2

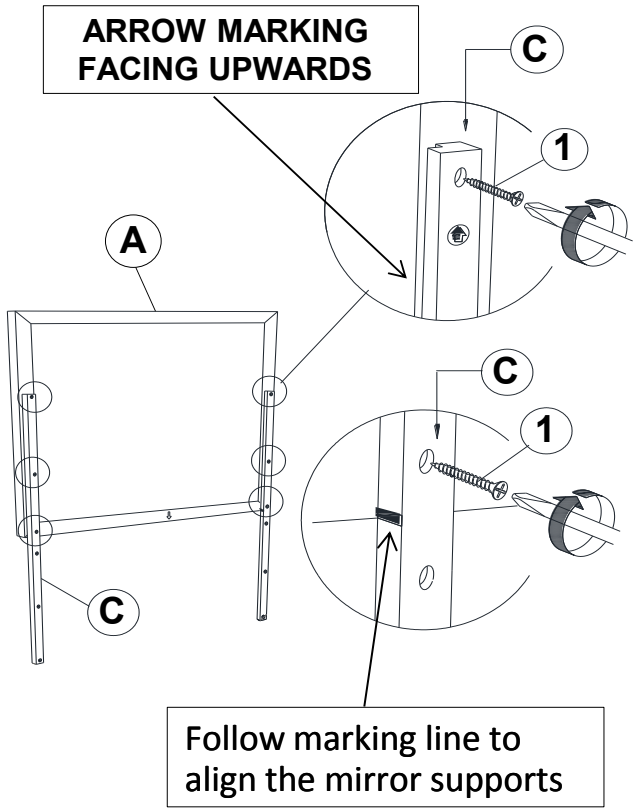

BACK VIEW

STEP 3

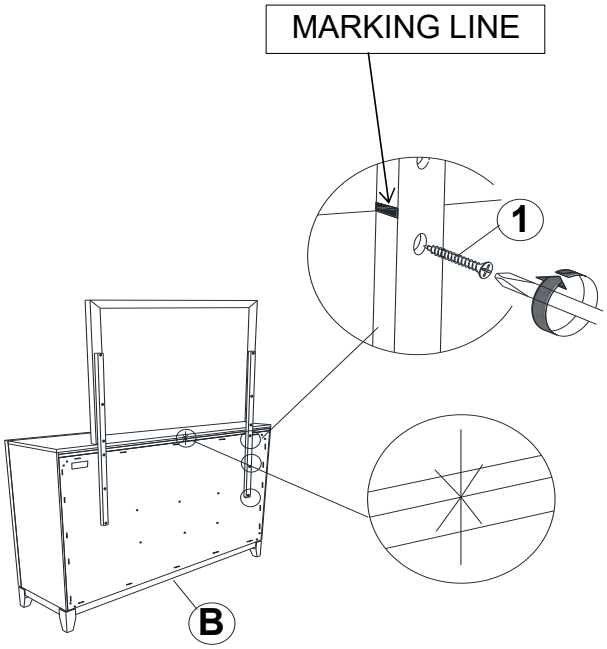

REMARK:
ARROW MARKING MUST BE ALIGNED

STEP 4

COMPLETE

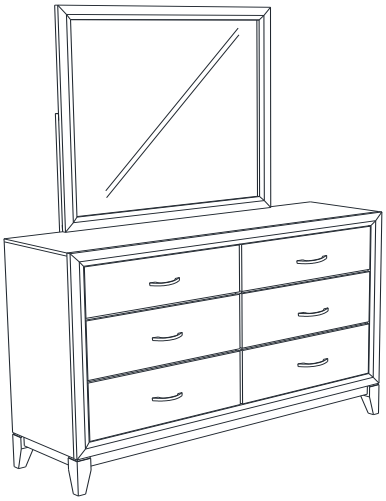

ITEM: **215914**

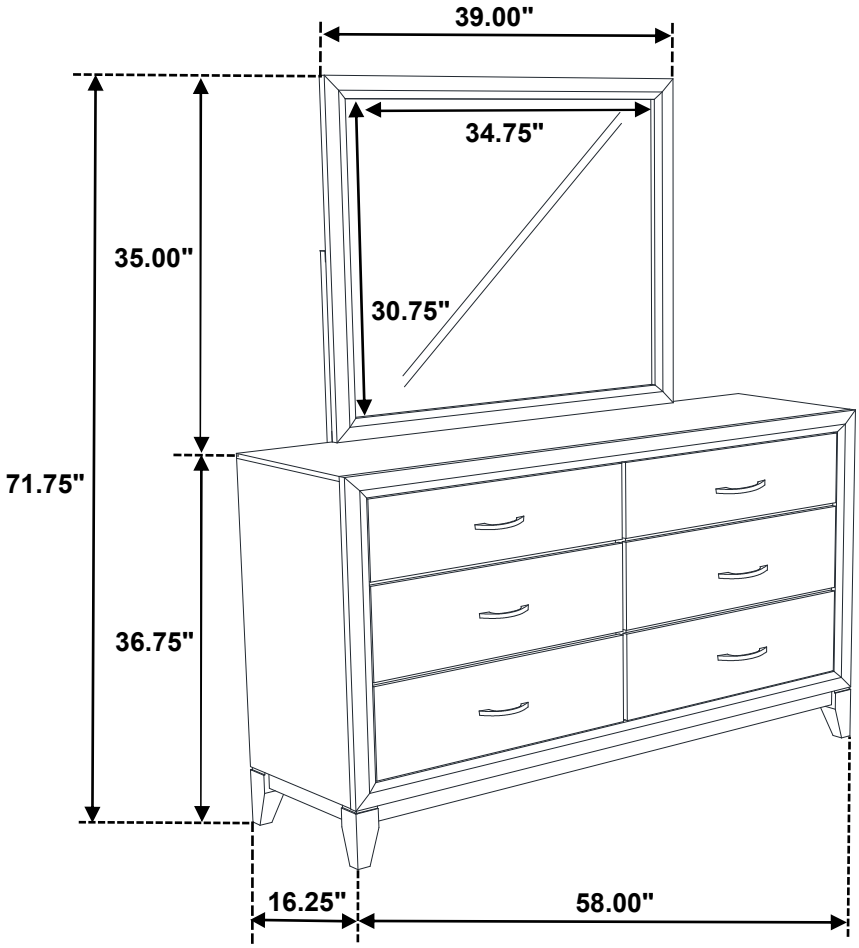

Note : Dimension tolerance ± 5%