COASTER
FINE FURNITURE

ASSEMBLY INSTRUCTIONS
COASTER FINE FURNITURE

Fine Furniture for every stage of life

460184 (B1-B3)
Twin/Full Bunk Bed

REVISION 0 : 01/03/2014
REVISION 1 : 04/13/2015
REVISION 2 : 01/12/2016
REVISION 3 : 03/01/2016
REVISION 4 : 06/16/2016
REVISION 5 : 08/12/2016
REVISION 6 : 06/12/2018
REVISION 7 : 12/04/2018
REVISION 8 : 11/04/2019
REVISION 9 : 09/15/2026

COASTERFURNITURE.COM

ITEM: 460184(B1-B3)

ASSEMBLY INSTRUCTIONS

ASSEMBLY TIPS:

1. Remove hardware from box and sort by size.
2. Please check to see that all hardware and parts are present prior to start of assembly.
3. Please follow attached instructions in the same sequence as numbered to assure fast & easy assembly.

WARNING!

1. Don't attempt to repair or modify parts that are broken or defective. Please contact the store immediately.
2. This product is for home use only and not intended for commercial establishments.

ASSEMBLY TIME	30 MINUTES

PARTS IDENTIFICATION

B1 (BOX 1)

AF	LEFT UPPER BED END	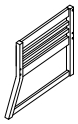	1PC
BF	RIGHT UPPER BED END	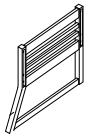	1PC
CF	LEFT LOWER BED END		1PC
DF	RIGHT LOWER BED END	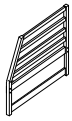	1PC

B2 (BOX 2)

EF	FRONT LOWER SIDE RAIL		1PC
FF	BACK LOWER SIDE RAIL		1PC
GF	BACK UPPER GUARDRAIL		1PC
HF	FRONT UPPER GUARDRAIL		1PC
KF1	LEFT LADDER STILE	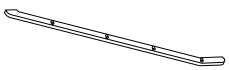	1PC
LF1	RIGHT LADDER STILE		1PC
MF1	LADDER STEP	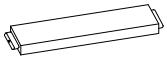	4PCS
NF	TRESTLE BAR		1PC
OF	DRAWER FRONT PANEL	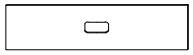	2PCS
PF	DRAWER SIDE PANEL	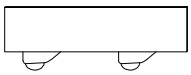	4PCS
QF	DRAWER BACK PANEL	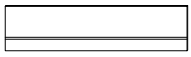	2PCS
RF	DRAWER BOTTOM PANEL		2PCS

B3 (BOX 3)

IF	UPPER BUNK ROLL SLAT (14PCS)	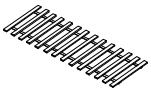	1SET
JF	LOWER BUNK ROLL SLAT (14PCS)	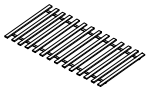	1SET
SF	BED SLAT SUPPORT WITH LEVELER		4PCS

NOTE:

Phillips head screw driver is required in the assembly process; however, manufacturer does not provide this item.

ITEM: 460184(B1-B3)

ASSEMBLY INSTRUCTIONS

ASSEMBLY TIPS:

1. Remove hardware from box and sort by size.
2. Please check to see that all hardware and parts are present prior to start of assembly.
3. Please follow attached instructions in the same sequence as numbered to assure fast & easy assembly.

WARNING!

1. Don't attempt to repair or modify parts that are broken or defective. Please contact the store immediately.
2. This product is for home use only and not intended for commercial establishments.

HARDWARE IDENTIFICATION

Z-B2 (BOX 2) - HARDWARE PACK IS LOCATED IN 460184(B2)

1	LONG BOLT (5/16 x 80 x 13mm - BLK)	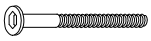	19PCS
2	BARREL NUT (5/16 x15mm - BLK)		19PCS
3	SHORT BOLT (1/4 x 35 x 15mm - BLK)		19PCS
4	ALLEN WRENCH (65 x 64MM - BLK)		1PC
5	Z - ALLEN WRENCH (20 x 50 x 50MM - BLK)		1PC
6	METAL DOWEL (12 x 125mm - BLK)		4PCS
7	FLAT HEAD SCREW (4 x 35mm - BLK)		80PCS
8	WOOD CLEAT (20 x 45 x 50mm)		4PCS

NOTE:

Phillips head screw driver is required in the assembly process; however, manufacturer does not provide this item.

ITEM: **460184(B1-B3)**

ASSEMBLY INSTRUCTIONS

STEP 1

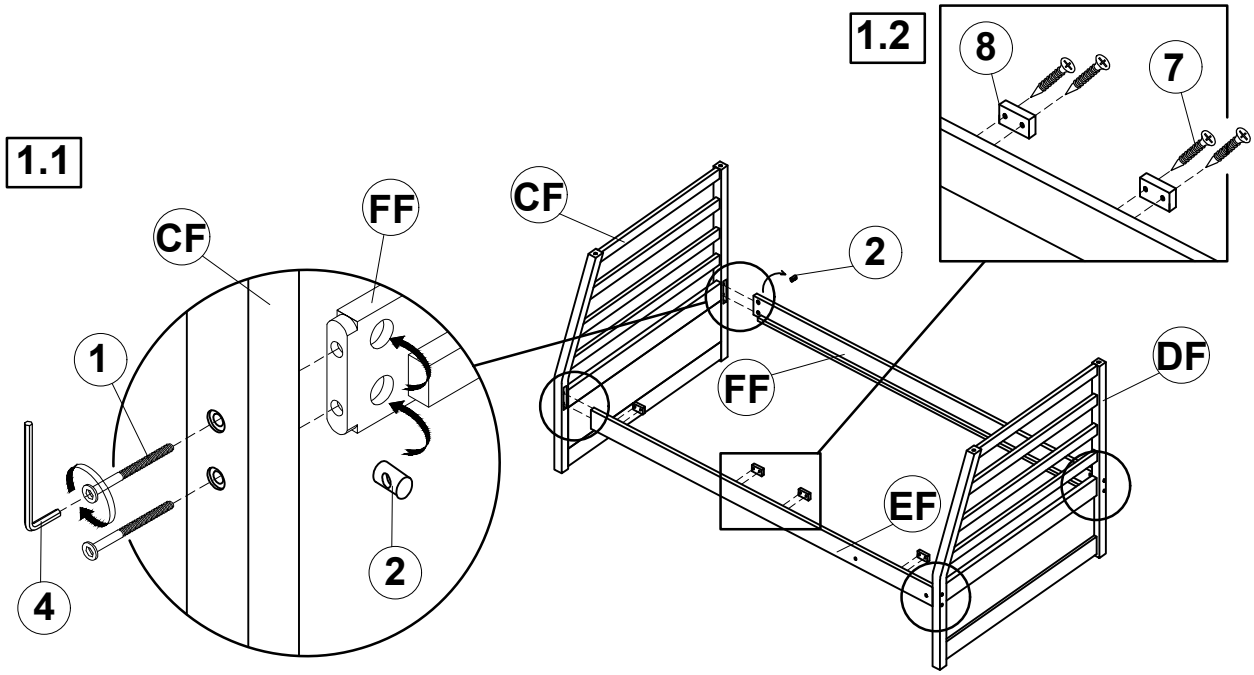

STEP 2

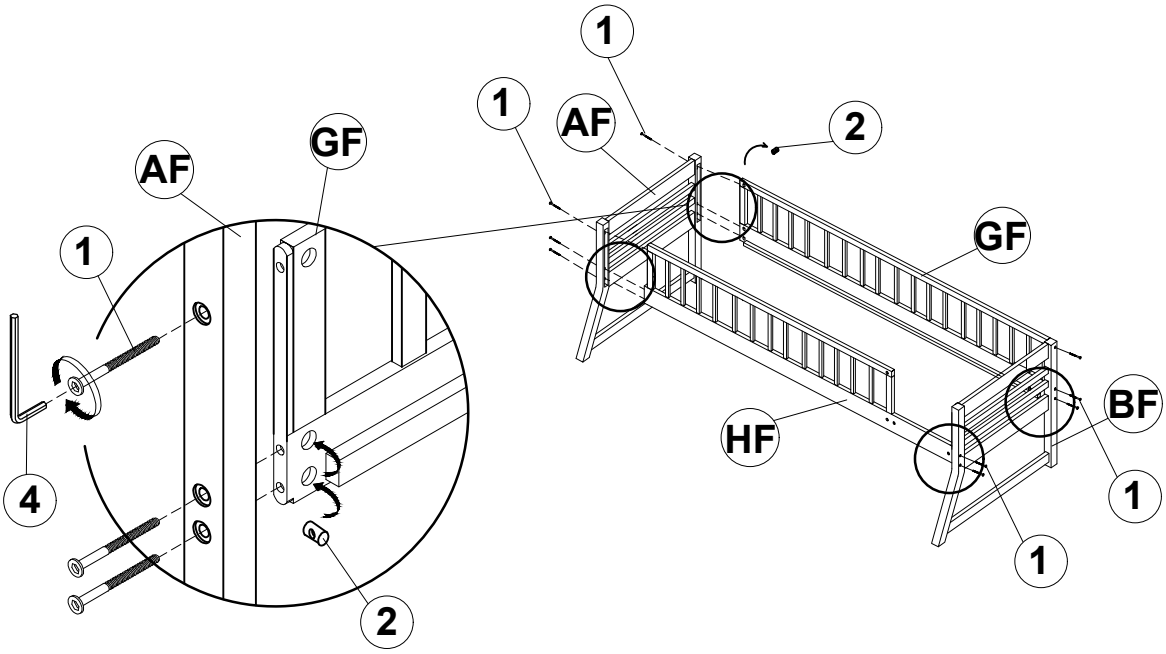

ITEM: **460184(B1-B3)**

ASSEMBLY INSTRUCTIONS

COASTER FINE FURNITURE

STEP 3

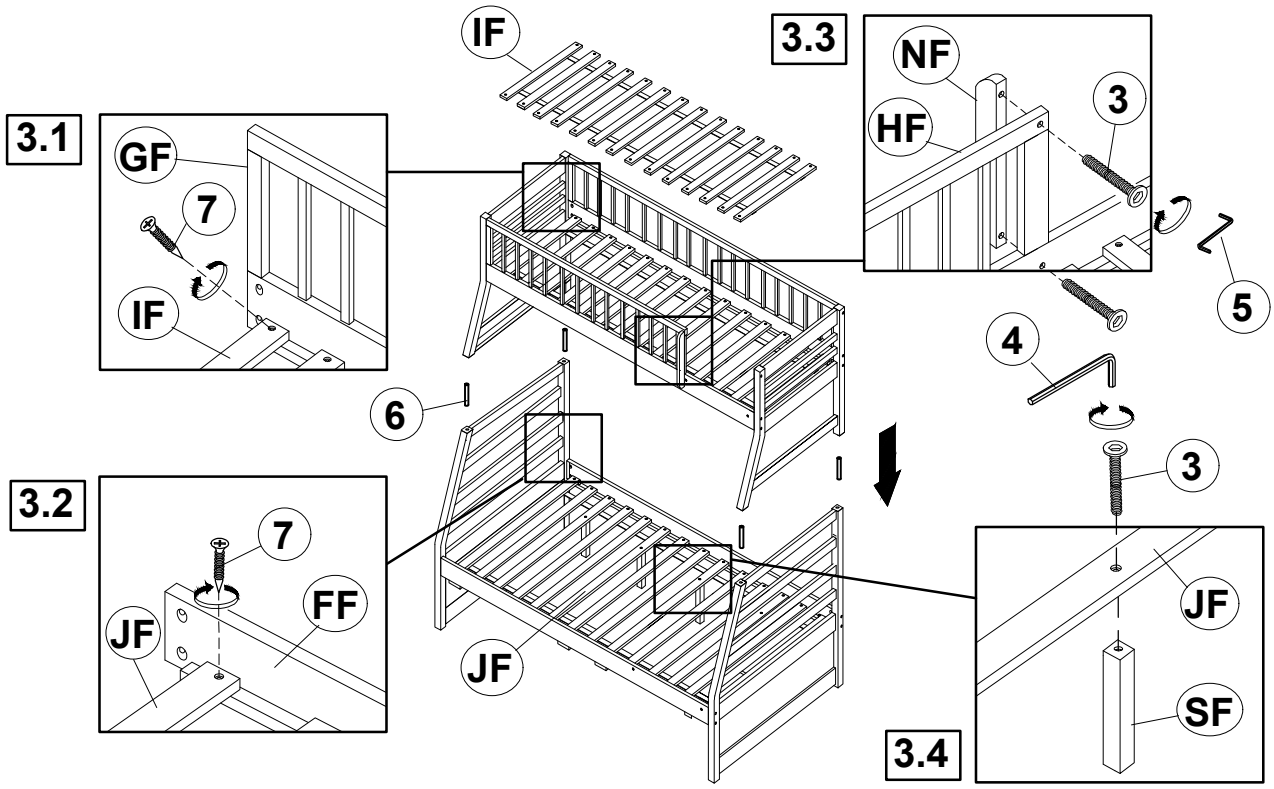

STEP 4

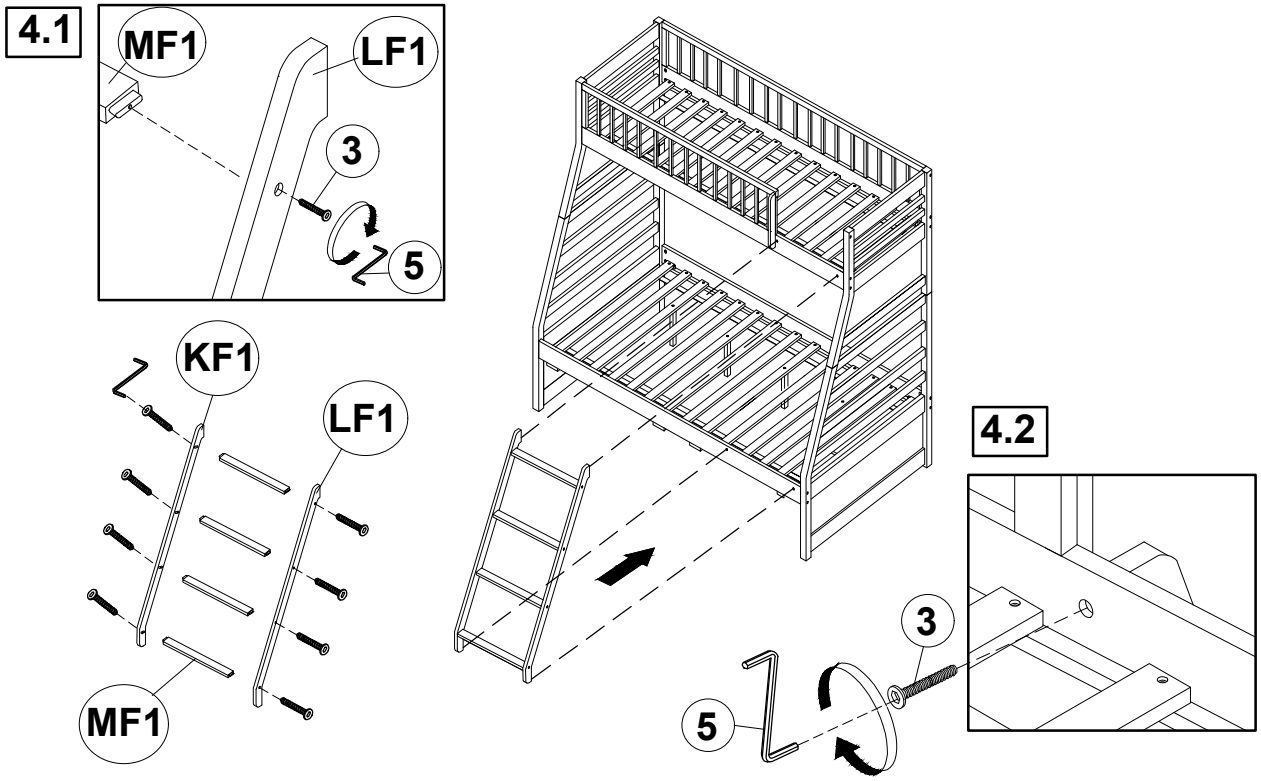

ITEM: **460184(B1-B3)**

ASSEMBLY INSTRUCTIONS

STEP 5

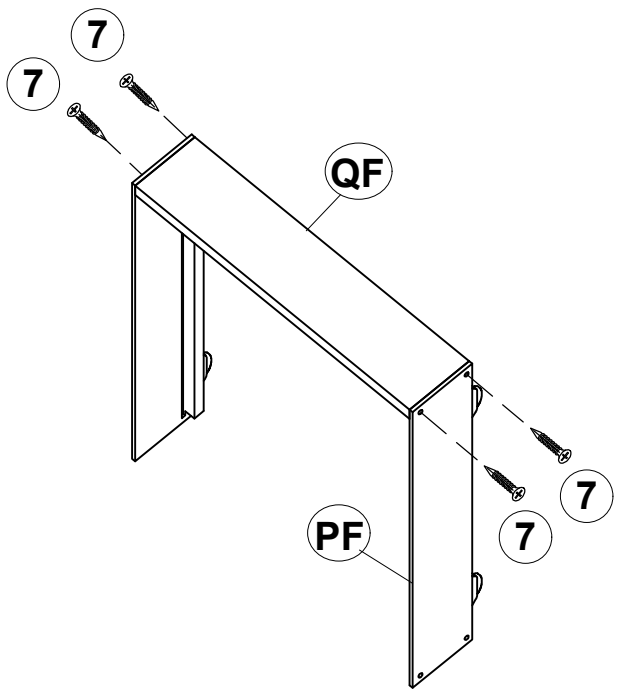

STEP 6

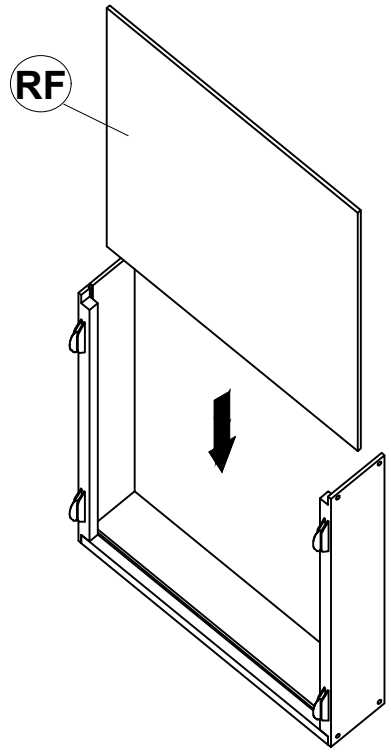

STEP 7

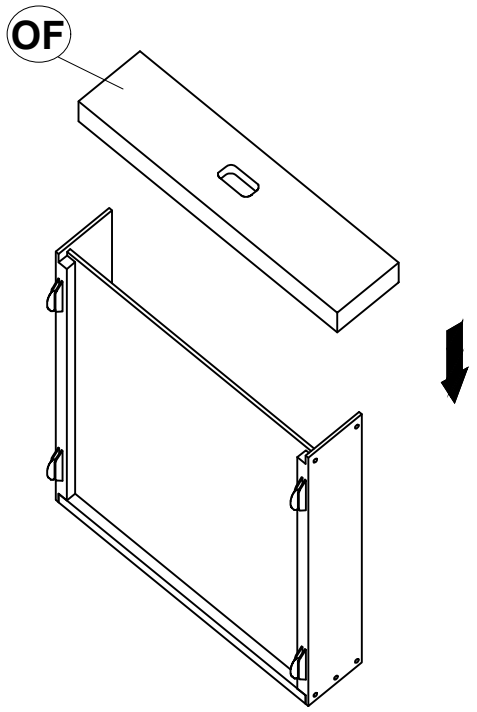

STEP 8

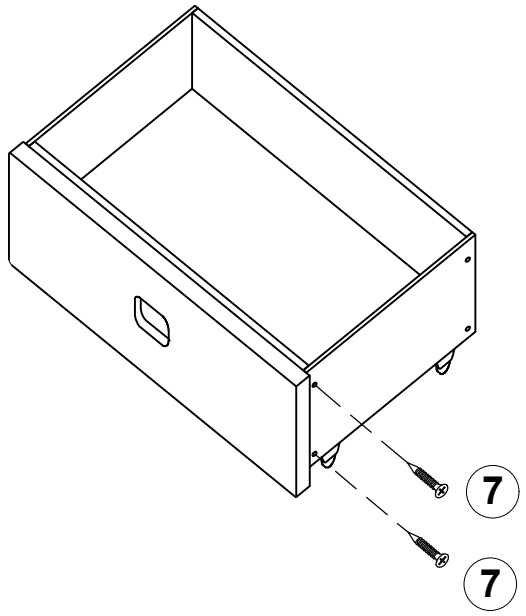

ITEM: **460184(B1-B3)**

ASSEMBLY INSTRUCTIONS

STEP 9

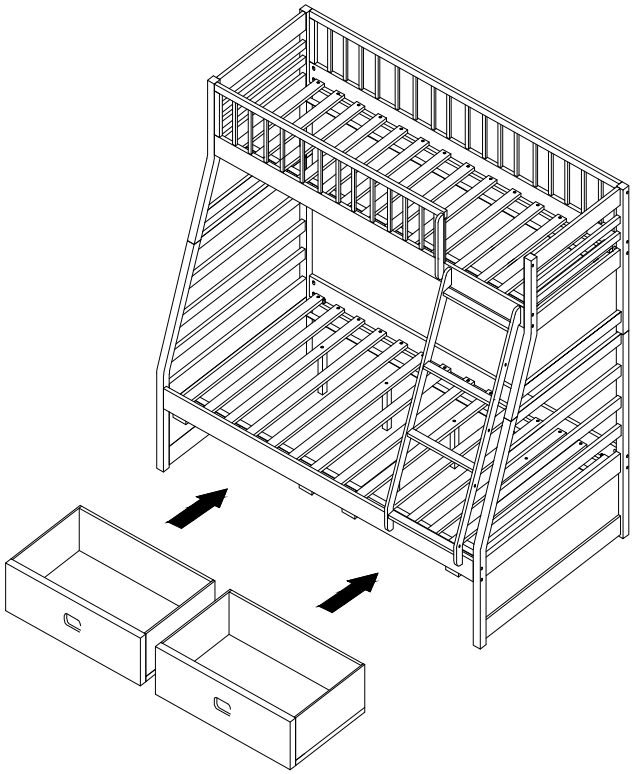

STEP 10

COMPLETE

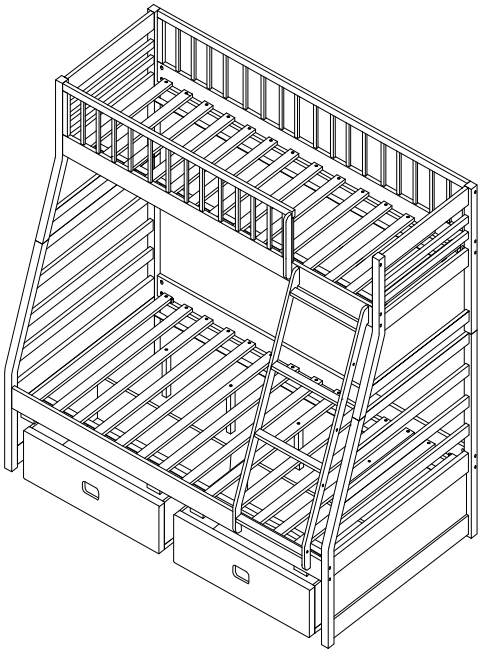

SIZE OF MATTRESS

The length and width of the bunk mattress are as follow:

	Length	Width	Thickness
Upper bunk	***74" -75"***	***37 1/2"- 38 1/2"***	***6" Maximum***
Lower bunk	***74" -75"***	***54"***	***6" Maximum***

Ensure thickness of mattress does not exceed 6" and there must be at least 5" from mattress sleeping surface to top edge of guardrail.

SAFETY WARNING

1. Follow the information on the warnings appearing on the upper bunk end structure and on the carton. Do not remove the warning label from bed.
2. Always use the recommended size mattress or mattress support or both to help prevent the likelihood of entrapment or falls.
3. Surface of mattress must be at least 5 in. (127 mm) below the upper edge of guardrails.
4. Do not allow children under 6 years of age to use the upper bunk.
5. Prohibit more than one person on upper bunk.
6. Periodically check and ensure that the guardrail, ladder, and other components are in their proper position, free from damage, and that all connectors are tight.
7. Do not allow horseplay on or under the bed and prohibit jumping on the bed.
8. Always use the ladder for entering and leaving the upper bunk.
9. Do not use substitute parts. Contact the manufacturer or dealer for replacement parts.
10. Use of a night light may provide added safety precaution for a child using upper bunk.
11. Always use guardrails on both long sides of the upper bunk. If the bunk bed will be placed next to the wall, the guardrail that runs the full length of the bed should be placed against the wall to prevent entrapment between the bed and wall.
12. The use of water or sleep flotation mattress is prohibited.
13. Keep these instructions for future reference.

STRANGULATION HAZARD:

14. Never attach or hang items to any part of the bunk bed that are not designed for use with the bed for example, but not limited to hooks, belts, and jump ropes.

REPLACEMENT PARTS

Replacement parts, including additional guardrails may be obtained from any COASTER Furniture Dealer.

ITEM: **460184(B1-B3)**

ASSEMBLY INSTRUCTIONS

⚠ WARNING ⚠

TO PREVENT SERIOUS OR FATAL INJURY

1. When using beds as bunk beds, the ladder MUST be securely attached to the upper bunk rail at all times.

2. When using the beds as two (2) separate floor-standing beds, the ladder MUST be stored in a separate location where children cannot use the ladder in any manner.

3. DO NOT use, nor permit children to use, the ladder in any manner whatsoever, other than to access the top unit when used as bunk beds, and only if the ladder is securely attached to the top bunk rail, as set forth in the instructions.

4. Any misuse or unauthorized use of the ladder could result in serious or fatal injury.

5 Failure to follow the above WARNING, and/or failure to follow assembly instructions completely, will void any and all liability of COASTER COMPANY OF AMERICA for damages and injury to persons and property.

COASTER®
FINE FURNITURE

Coasterfurniture.com I 877-COASTER (262-7837)

ITEM: **460184(B1-B3)**

Upper Inner Size: 74.75"W X 39.50"D
Lower Inner Size: 74.75"W X 54.25"D

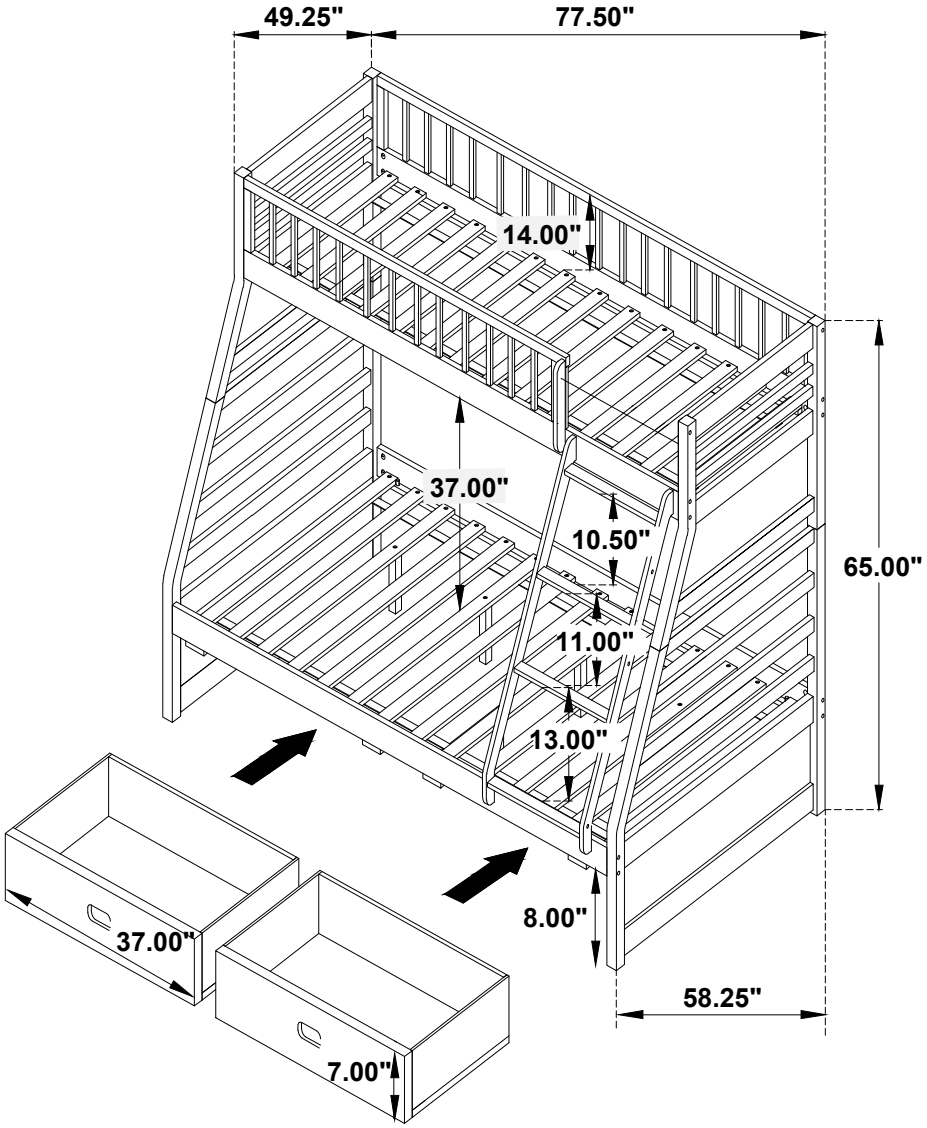

Note: Dimension tolerance ± 5%