ASSEMBLY INSTRUCTIONS
COASTER FINE FURNITURE

Fine Furniture for every stage of life

193952NAT
Side Chair

REVISION 0 : 02/02/2026

COASTERFURNITURE.COM

ITEM : 193952NAT

ASSEMBLY INSTRUCTIONS

ASSEMBLY TIPS:

1. Remove hardware from box and sort by size.
2. Please check to see that all hardware and parts are present prior to start of assembly.
3. Please follow attached instructions in the same sequence as numbered to assure fast & easy assembly.

WARNING!

1. Don't attempt to repair or modify parts that are broken or defective. Please contact the store immediately.
2. This product is for home use only and not intended for commercial establishments.

ASSEMBLY TIME	20 MINUTES

PARTS IDENTIFICATION

A	RIGHT LEG FRAME	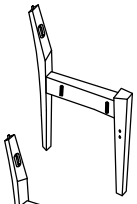	1PC
B	LEFT LEG FRAME	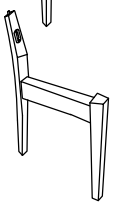	1PC
C	FRONT RAIL (LONG)	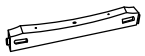	1PC
D	BACK RAIL (SHORT)		1PC
E	FRONT LOWER RAIL (LONG)		1PC
F	BACKREST		1PC
G	BACK CUSHION (SMALL)		1PC
H	SEAT CUSHION (BIG)		1PC

NOTE :

Quantities shown are for one chair.

ITEM : 193952NAT

ASSEMBLY INSTRUCTIONS

ASSEMBLY TIPS:

1. Remove hardware from box and sort by size.
2. Please check to see that all hardware and parts are present prior to start of assembly.
3. Please follow attached instructions in the same sequence as numbered to assure fast & easy assembly.

WARNING!

1. Don't attempt to repair or modify parts that are broken or defective. Please contact the store immediately.
2. This product is for home use only and not intended for commercial establishments.

HARDWARE IDENTIFICATION

1	**ALLEN WRENCH** **(M4 x 100mm - BLK)**		**1PC**
2	**BOLT** **(M6 x 40mm - RBW)**	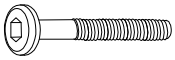	**4PCS**
3	**LOCK WASHER** **(1/4" - BLK)**		**4PCS**
4	**LONG PAN HEAD SCREW** **(#8 x 1 1/2" - BLK)**		**2PCS**
5	**MEDIUM PAN HEAD SCREW** **(#8 x 1 1/4" - BLK)**		**4PCS**
6	**SHORT PAN HEAD SCREW** **(#8 x 1" - BLK)**		**4PCS**
7	**CAM BOLT** **(263.20.847 - ZB)**		**2PCS**
8	**WOOD DOWEL** **(M8 x 30mm)**		**1PC**

NOTE :

Phillips head screw driver is required in the assembly process ; However, manufacturer does not provide this item.
Quantities shown are for one chair.

ITEM : **193952NAT**

ASSEMBLY INSTRUCTIONS

STEP 1

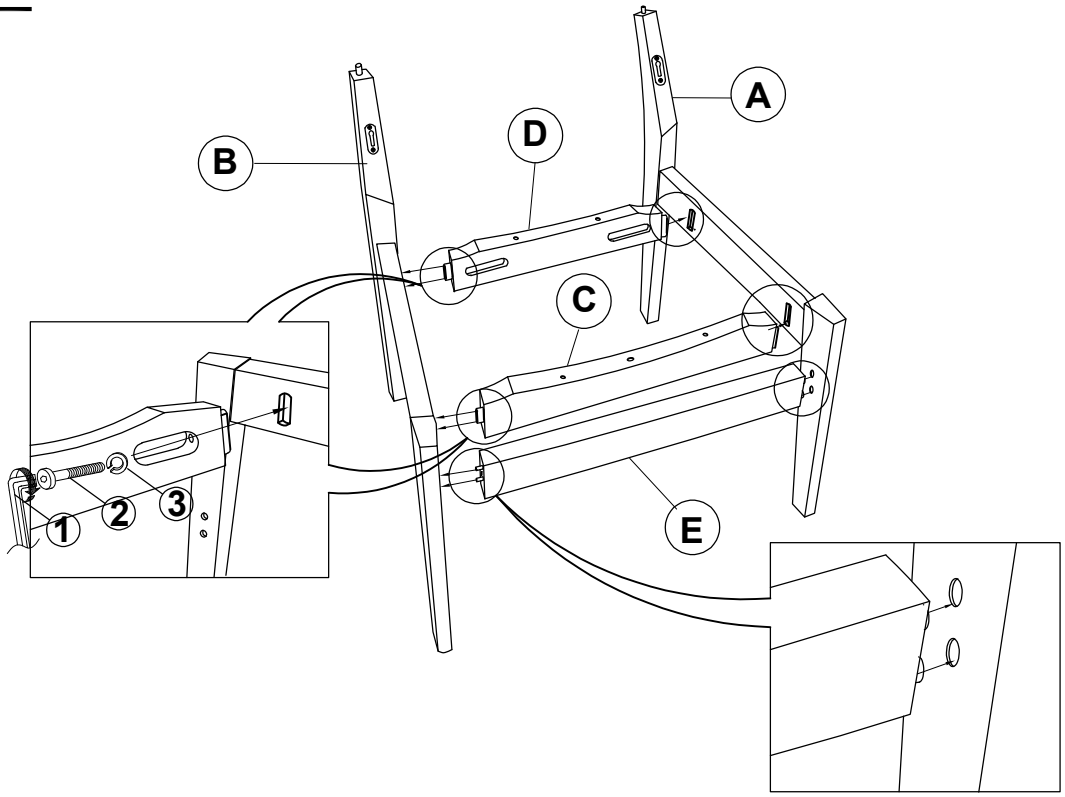

STEP 2

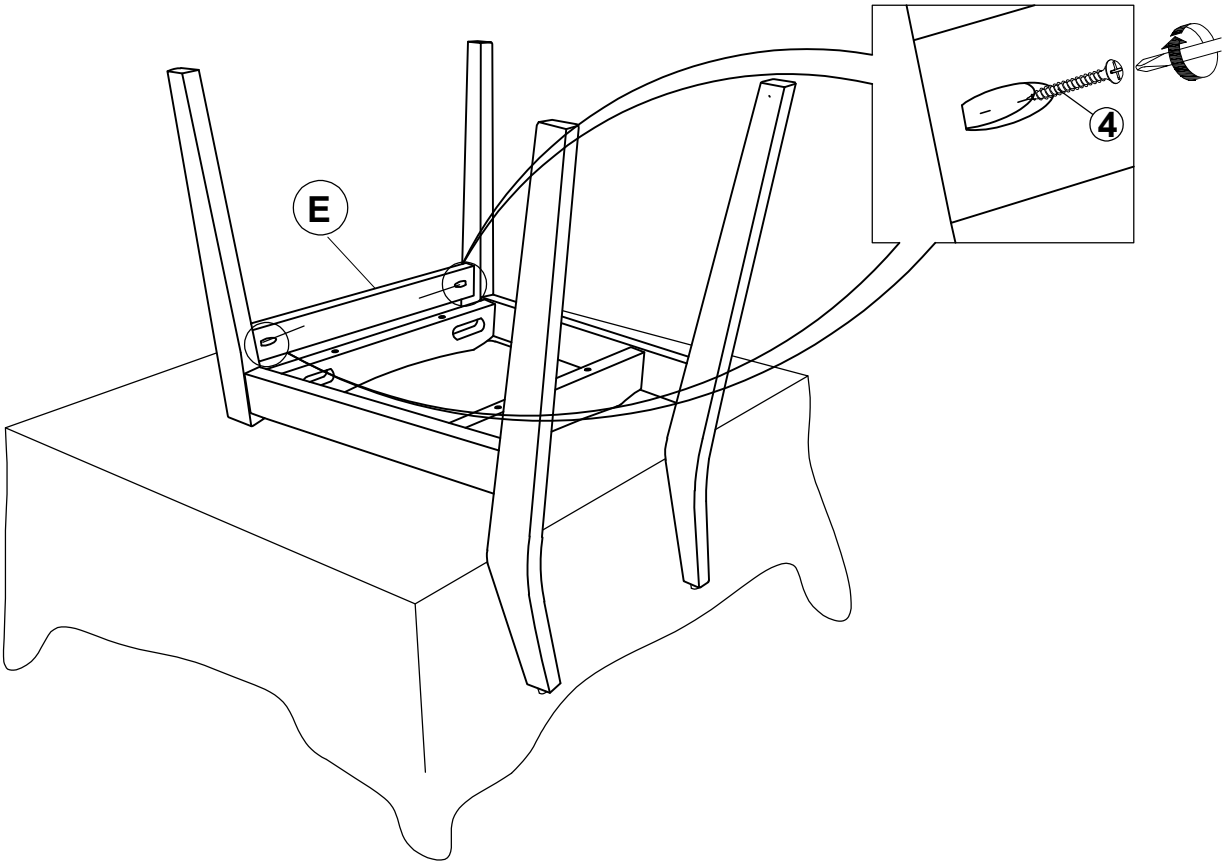

ITEM : **193952NAT**

ASSEMBLY INSTRUCTIONS

STEP 3

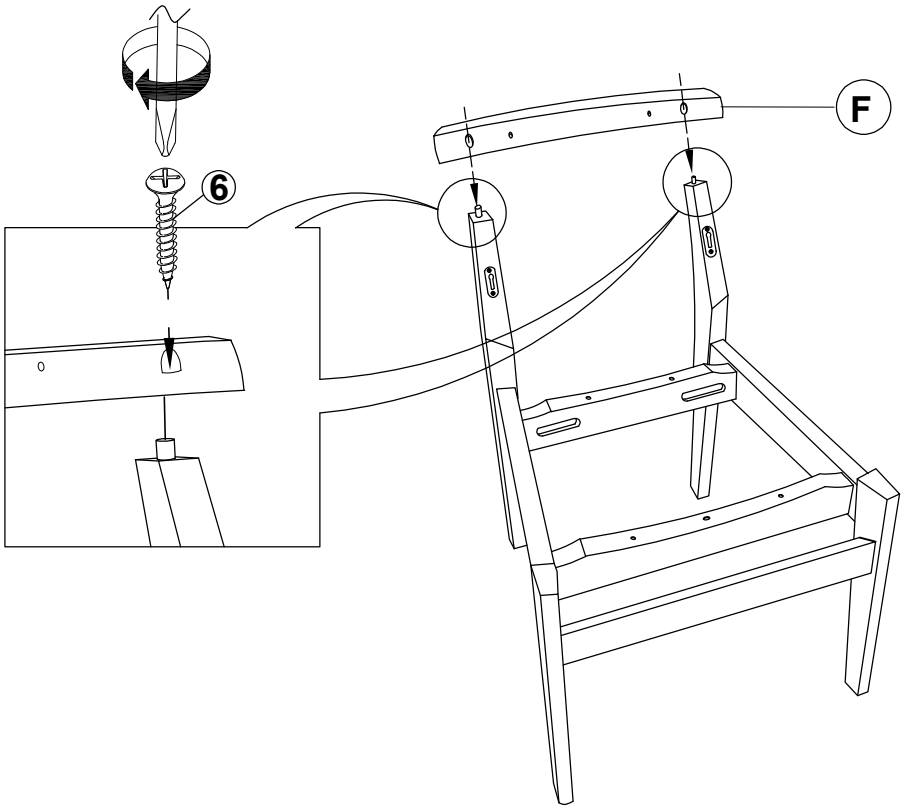

STEP 4

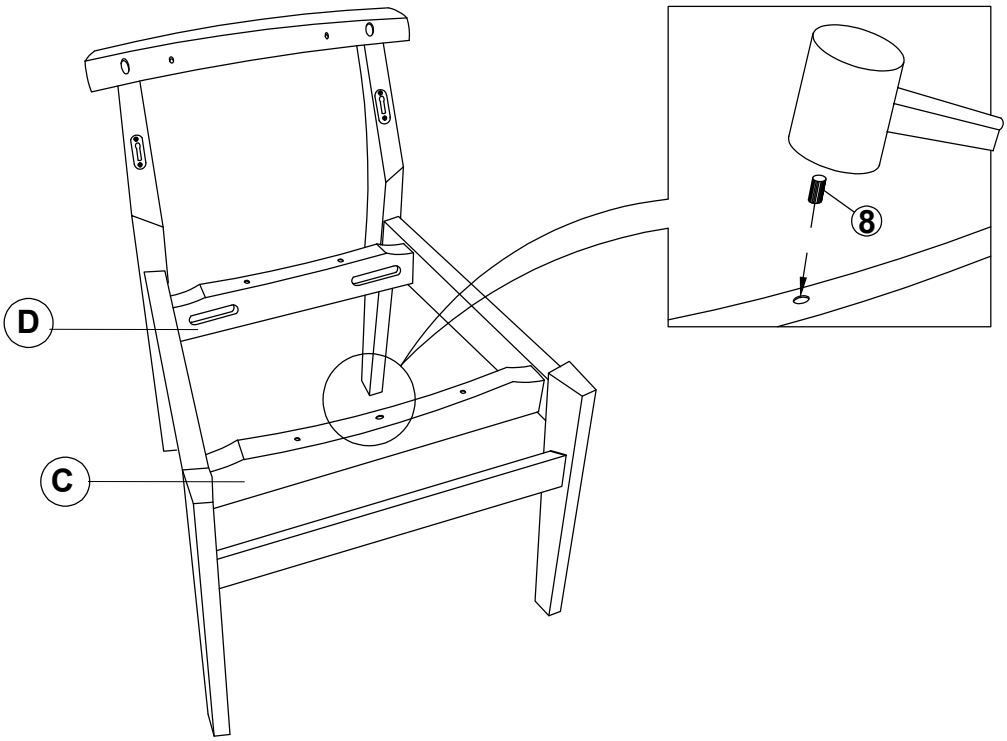

ITEM : **193952NAT**

ASSEMBLY INSTRUCTIONS

STEP 5

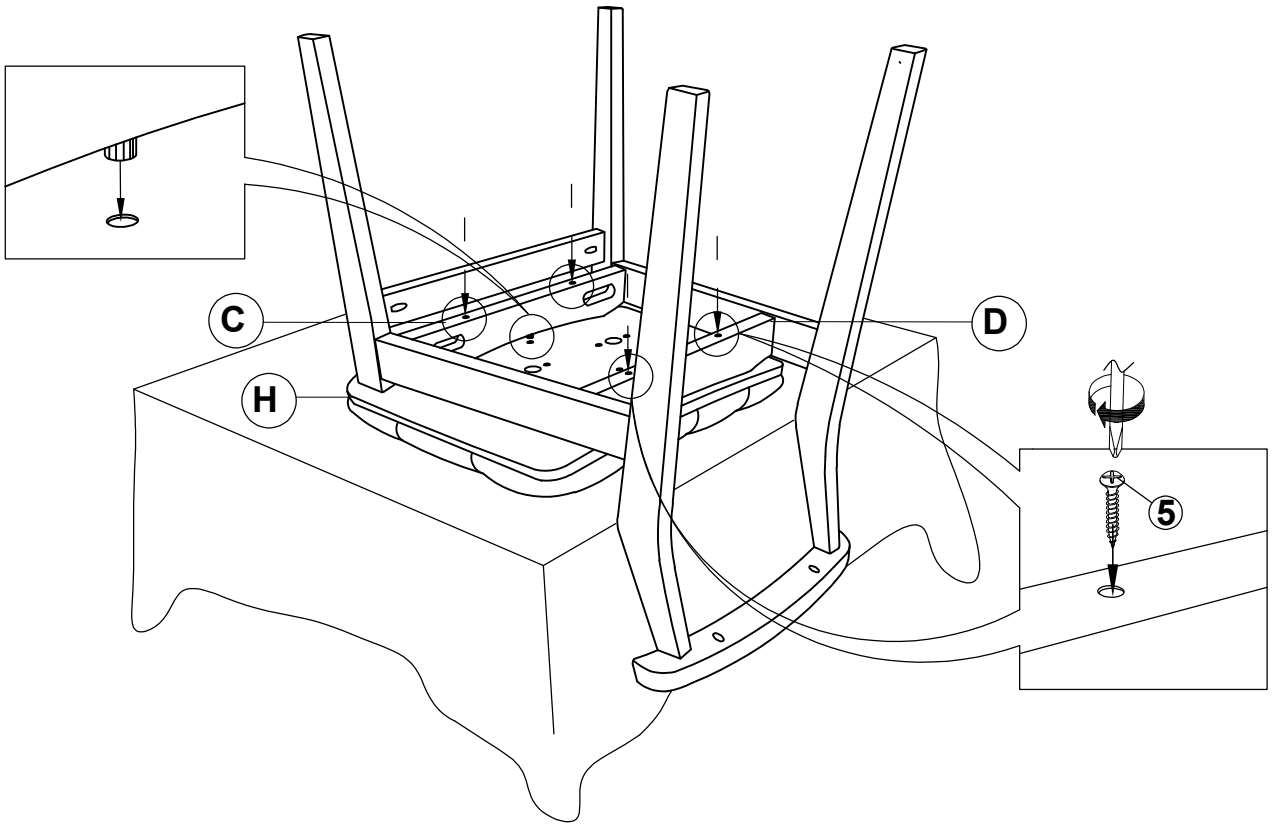

STEP 6

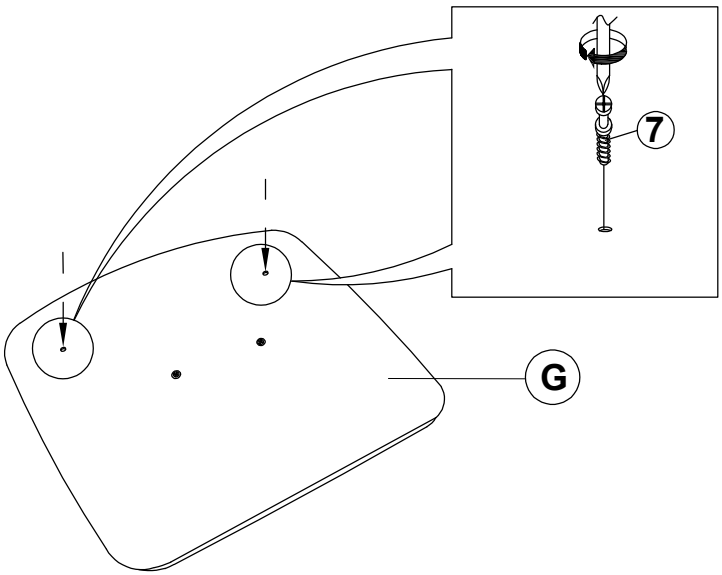

ITEM : **193952NAT**

ASSEMBLY INSTRUCTIONS

STEP 7

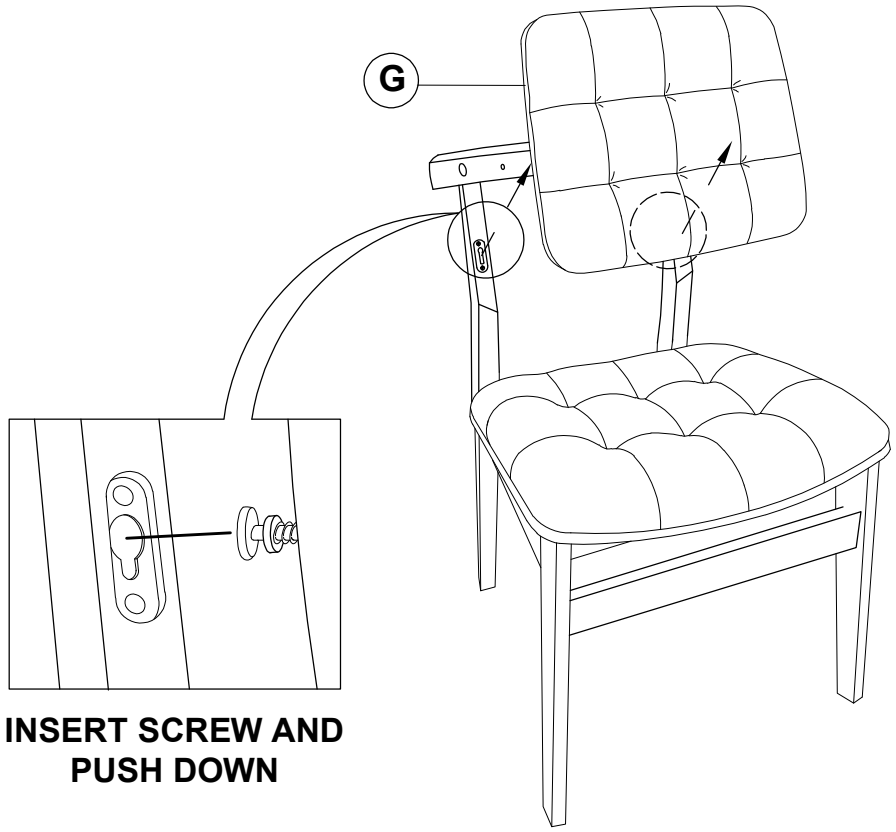

INSERT SCREW AND PUSH DOWN

STEP 8

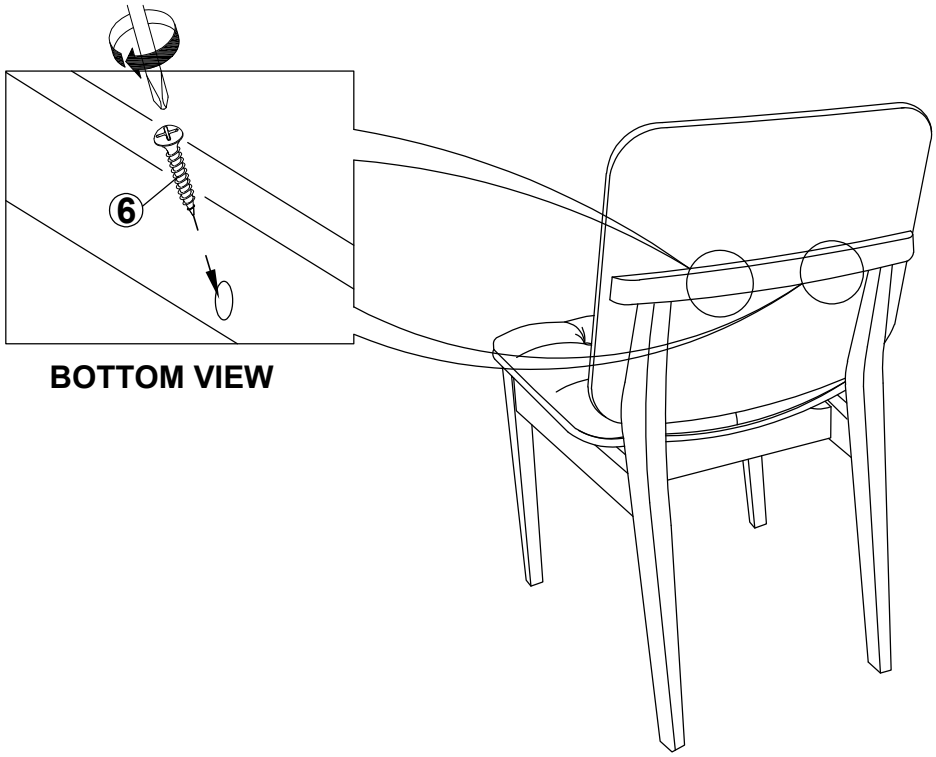

BOTTOM VIEW

ITEM : **193952NAT**

ASSEMBLY INSTRUCTIONS

STEP 9

COMPLETE

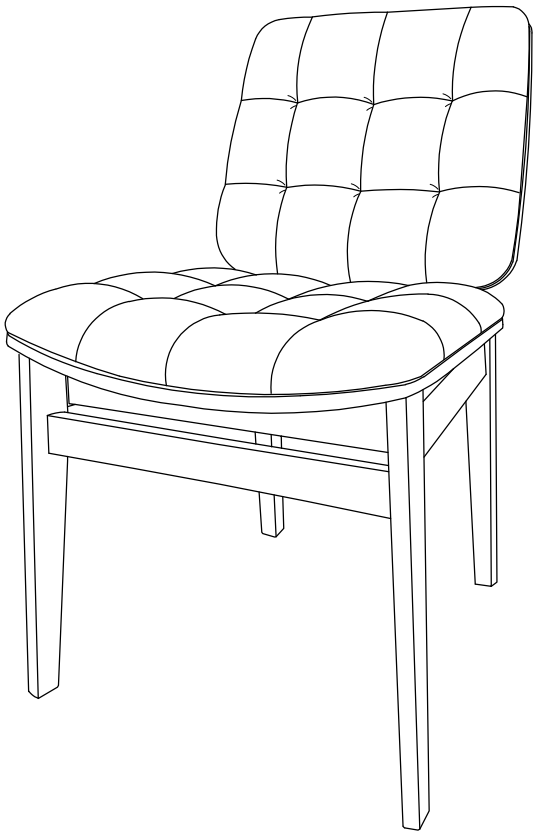

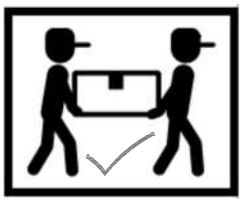

ITEM : 193952NAT

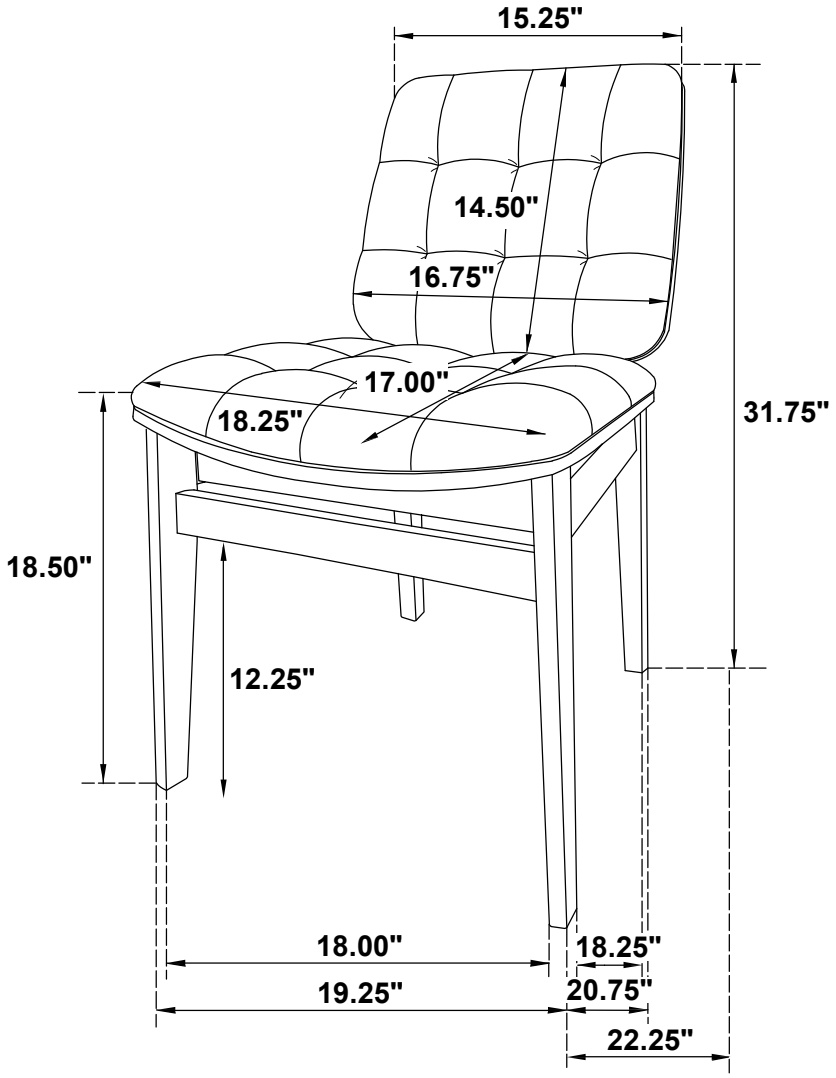

Note: Dimension tolerance ±5%